Final Progress Report for Research Projects Funded by Health Research Grants

Instructions: Please complete all of the items as instructed. Do not delete instructions. Do not leave any items blank; responses must be provided for all items. If your response to an item is "None", please specify "None" as your response. "Not applicable" is not an acceptable response for any of the items. There is no limit to the length of your response to any question. Responses should be single-spaced, no smaller than 12-point type. The report **must be completed using MS Word**. Submitted reports must be Word documents; they should not be converted to pdf format. Questions? Contact Health Research Program staff at 717-783-2548.

1. **Grantee Institution:** Fox Chase Cancer Center

2. **Reporting Period (start and end date of grant award period):** 1/1/2010 – 12/31/2013

3. **Grant Contact Person (First Name, M.I., Last Name, Degrees):** Maria Gill, M.B.A.

4. **Grant Contact Person's Telephone Number:** 215-728-2659

5. **Grant SAP Number:** 4100050895

6. **Project Number and Title of Research Project:** 1- Regulation of Genomic and Epigenomic Stability at CpG Sites

7. **Start and End Date of Research Project:** 1/1/2010 -12/31/2013

8. **Name of Principal Investigator for the Research Project:** Alfonso Bellacosa, M.D., Ph.D.

9. **Research Project Expenses**.

   9(A) Please provide the total amount of health research grant funds spent on this project for the entire duration of the grant, including indirect costs and any interest earned that was spent:

   $838,998

   9(B) Provide the last names (include first initial if multiple individuals with the same last name are listed) of **all** persons who worked on this research project and were supported with health research funds. Include position titles (Principal Investigator, Graduate Assistant, Post-doctoral Fellow, etc.), percent of effort on project and total health research funds expended for the position. For multiple year projects, if percent of effort varied from year to year, report in the % of Effort column the effort by year 1, 2, 3, etc. of the project (x% Yr 1; z% Yr 2-3).

Last Name, First Name	Position Title	% of Effort on Project	Cost
Bellacosa, Alfonso	Principal Investigator	50% Years 1-3	$247,624.16
Cortellino, Salvatore	Research Associate	35% Year 1	$22,011.49
Le Coz, Madeleine	Graduate Student	25% Year 2	$4,009.69
Cosentino, Laura	Postdoctoral Associate	30% Year 3	$3,146.35
Leger, Helene	Postdoctoral Associate	50% Year 3	$14,104.82

9(C) Provide the names of **all** persons who worked on this research project, but who *were not* supported with health research funds. Include position titles (Research Assistant, Administrative Assistant, etc.) and percent of effort on project. For multiple year projects, if percent of effort varied from year to year, report in the % of Effort column the effort by year 1, 2, 3, etc. of the project (x% Yr 1; z% Yr 2-3).

Last Name, First Name	Position Title	% of Effort on Project
None		

9(D) Provide a list of **all** scientific equipment purchased as part of this research grant, a short description of the value (benefit) derived by the institution from this equipment, and the cost of the equipment.

Type of Scientific Equipment	Value Derived	Cost
FMT 2500 LX Quantitative Tomography In Vivo Imaging System	The FMT2500 instrument is used to make three dimensional representations of the distribution of fluorescent molecules in living mice. Depending on the fluorescent imaging agent used, various biological processes can be imaged *in vivo*. The processes of interest to researchers in oncology include apoptosis, angiogenesis, tumor invasiveness, and tumor growth, all of which can be imaged non-invasively with this instrument.	$300,000

10. Co-funding of Research Project during Health Research Grant Award Period. Did this research project receive funding from any other source during the project period when it was supported by the health research grant?

Yes__X_____ No_____

If yes, please indicate the source and amount of other funds:

Grant Number: R01 CA078412
Title: Regulation of Genomic and Epigenomic Stability at CpG Sites
Project Period: 7/1/10 – 4/30/15
Project Funds: $1,873,623 total costs (all years)

11. Leveraging of Additional Funds

11(A) As a result of the health research funds provided for this research project, were you able to apply for and/or obtain funding from other sources to continue or expand the research?

Yes___X_____ No_____

If yes, please list the applications submitted (column A), the funding agency (National Institutes of Health—NIH, or other source in column B), the month and year when the application was submitted (column C), and the amount of funds requested (column D). If you have received a notice that the grant will be funded, please indicate the amount of funds to be awarded (column E). If the grant was not funded, insert "not funded" in column E.

Do not include funding from your own institution or from CURE (tobacco settlement funds). Do not include grants submitted prior to the start date of the grant as shown in Question 2. If you list grants submitted within 1-6 months of the start date of this grant, add a statement below the table indicating how the data/results from this project were used to secure that grant.

A. Title of research project on grant application	B. Funding agency (check those that apply)	C. Month and Year Submitted	D. Amount of funds requested:	E. Amount of funds to be awarded:
R01 - Regulation of Genomic and Epigenomic Stability at CpG Sites	☒NIH ☐ Other federal (specify:_____ _____) ☐ Nonfederal source (specify: _____)	November 2009	$2,181,250	$1,876,623
R01 - The role of active DNA demethylation in transgenerational epigenetic inheritance	☒NIH ☐ Other federal (specify:_____ _____) ☐ Nonfederal source (specify: _____)	January 2014	$889,952	pending
	☐NIH ☐ Other federal (specify:_____		$	$

	_____) ☐ Nonfederal source (specify: _____)			

11(B) Are you planning to apply for additional funding in the future to continue or expand the research?

Yes____X_____ No_____

If yes, please describe your plans:

I plan to renew the awarded R01. Also, I plan to submit other grant applications related to the role of thymine DNA glycosylase (TDG) and methyl-CpG binding endonuclease1 (MED1) in development, cancer and DNA demethylation.

12. Future of Research Project. What are the future plans for this research project?

We were among the first to propose an involvement of base excision repair in DNA demethylation, and in turn in development and cancer, which was the subject of this research project. Therefore, we plan to continue these studies.

13. New Investigator Training and Development. Did students participate in project supported internships or graduate or post-graduate training for at least one semester or one summer?

Yes__X_____ No_____

If yes, how many students? Please specify in the tables below:

	Undergraduate	Masters	Pre-doc	Post-doc
Male				
Female			1	2
Unknown				
Total			**1**	**2**

	Undergraduate	Masters	Pre-doc	Post-doc
Hispanic				
Non-Hispanic			1	2
Unknown				
Total			**1**	**2**

	Undergraduate	Masters	Pre-doc	Post-doc
White			1	2
Black				
Asian				
Other				
Unknown				
Total			**1**	**2**

14. Recruitment of Out-of–State Researchers. Did you bring researchers into Pennsylvania to carry out this research project?

Yes____X_____ No_____

If yes, please list the name and degree of each researcher and his/her previous affiliation:

Helene Leger, Ph.D., Institut des Hautes Etudes Scientifiques, Bures-sur-Yvette, France

15. Impact on Research Capacity and Quality. Did the health research project enhance the quality and/or capacity of research at your institution?

Yes____X_____ No_____

If yes, describe how improvements in infrastructure, the addition of new investigators, and other resources have led to more and better research.

As a consequence of the support from PA Dept. of Health, our research group developed a specific expertise in mouse development, which has been a useful addition to Fox Chase Cancer Center research portfolio. We have acted as consultants for mouse studies with several Fox Chase Principal Investigators. In addition, we have initiated several collaborations with colleagues at Fox Chase Cancer Center, as a direct consequence of the studies performed within this project.

16. Collaboration, business and community involvement.

16(A) Did the health research funds lead to collaboration with research partners outside of your institution (e.g., entire university, entire hospital system)?

Yes___X_____ No_____

If yes, please describe the collaborations:

We have initiated collaborations with the following colleagues:

Dr. Helen Blau (Stanford University), on the role of base excision repair in reprogramming
Dr. Priscilla Cooper (Lawrence Berkeley National Laboratory), on the TDG-XPG interaction
Dr. Amy Kenter (University of Illinois at Chicago), on the role of MBD4 in immunoglobulin class-switch recombination
Dr. Douglas Melton (Harvard University), on the role of TDG in pancreatic development
Dr. Michele Nussenzweig (The Rockefeller University), on the role of TDG in immunoglobulin class-switch recombination and somatic hypermutation
Dr. Anjana Rao (La Jolla Institute of Allergology & Immunology), on the role of TDG in T-cell development
Dr. Robert Sobol (University of Pittsburgh), on a novel base excision repair assay

16(B) Did the research project result in commercial development of any research products?

Yes_____ No___X_____

If yes, please describe commercial development activities that resulted from the research project:

16(C) Did the research lead to new involvement with the community?

Yes_____ No____X_____

If yes, please describe involvement with community groups that resulted from the research project:

17. Progress in Achieving Research Goals, Objectives and Aims.

List the project goals, objectives and specific aims (as contained in the grant agreement). Summarize the progress made in achieving these goals, objectives and aims <u>for the period that the project was funded (i.e., from project start date through end date).</u> Indicate whether or not each goal/objective/aim was achieved; if something was not achieved, note the reasons why. Describe the methods used. If changes were made to the research goals/objectives/aims, methods, design or timeline since the original grant application was submitted, please describe the changes. <u>Provide detailed results of the project.</u> Include evidence of the data that was generated and analyzed, and provide tables, graphs, and figures of the data. List published abstracts, poster presentations and scientific meeting presentations at the end of the summary of progress; peer-reviewed publications should be listed under item 20.

This response should be a <u>DETAILED</u> report of the methods and findings. It is not sufficient to state that the work was completed. Insufficient information may result in an unfavorable performance review, which may jeopardize future funding. If research findings are pending publication you must still include enough detail for the expert peer reviewers to evaluate the progress during the course of the project.

Health research grants funded under the Tobacco Settlement Act will be evaluated via a performance review by an expert panel of researchers and clinicians who will assess project work using this Final Progress Report, all project Annual Reports and the project's strategic plan. After the final performance review of each project is complete, approximately 12-16 months after the end of the grant, this Final Progress Report, as well as the Final Performance Review Report containing the comments of the expert review panel, and the grantee's written response to the Final Performance Review Report, will be posted on the CURE Web site.

There is no limit to the length of your response. Responses must be single-spaced below, no smaller than 12-point type. If you cut and paste text from a publication, be sure symbols print properly, e.g., the Greek symbol for alpha (α) and beta (ß) should not print as boxes (□) and include the appropriate citation(s). DO NOT DELETE THESE INSTRUCTIONS.

The purpose of this project is to understand how two base excision repair enzymes, thymine DNA glycosylase (TDG) and methyl-CpG-binding endonuclease 1(MED1)/ methyl binding domain 4 (MBD4), not only protect CpG sequences from transition mutations and ward off against endogenous deamination events, but also mediate DNA demethylation and modulate DNA methylation states, chromatin structure and gene transcription. This dual role in genomic and epigenomic stability of CpG sites is likely to be important for cancer formation, given the frequent occurrence of CpG to CpA (or TpG) point mutations and hypermethylation of tumor suppressor genes in cancer. Thus, knowledge accumulated in this project may lead to novel strategies for cancer prevention.

Our hypothesis is that the mammalian DNA repair enzymes TDG and MED1/MBD4 have dual functions in protection from tumorigenesis and developmental disorders: 1) Promote genomic stability at CpG sites by suppressing mutations; and 2) Maintain proper DNA methylation patterns by regulating CpG demethylation. To test this general hypothesis, we propose five Specific Aims:

Aim 1: Characterize the requirement of TDG during development and its role in DNA demethylation and chromatin modification, using knock-out and knock-in mice;
Aim 2: Evaluate the role of MED1 and TDG in tumorigenesis using animal models of intestinal cancer and analyzing human cancer specimens.
Aim 3: Analysis of MED1 sumoylation in DNA damage response and repair;
Aim 4: Characterization of the structure and function of the TDG demethylating complex;
Aim 5: Characterization of the phenotype of TDG-MED1-double mutant embryos.

<u>Specific Aim 1</u>

While DNA methyltransferases are known to initiate DNA methylation, until only a few years ago it was less clear how the removal of the methylation, i.e. demethylation, takes place. Evidence in Arabidopsis and Zebra fish pointed to the role of the DNA repair machinery in effecting demethylation, either by direct removal of 5-methylcytosine, or by enzymatic conversion of 5-methylcytosine by deaminases into thymine, which is then

removed from the resulting G:T mismatch. Our recent work contributed to the identification of active mechanisms for cytosine demethylation in mammals.

We inactivated in the mouse germ line the gene encoding the mammalian T:G mismatch-specific thymine and uracil glycosylase, TDG. This led to an unexpected phenotype of embryonic lethality that suggested an important and non-redundant developmental role for TDG. Further characterization of the TDG knock-out embryos disclosed a function of TDG in epigenomic stability, and specifically a role of TDG in cytosine demethylation, by both maintaining CpG islands in their unmethylated state, and promoting demethylation of tissue-specific, hormonally and developmentally regulated promoters and enhancers. We also described the embryonic lethality of Tdg knock-in mice bearing an inactivating point mutation in the glycosylase active site, thus presenting some of the most compelling genetic evidence on the existence of active, enzymatically-driven, DNA demethylation processes.

Detailed discussion of methods employed, results and conclusions is published in an editorially highlighted manuscript in Cell in 2011 (Cortellino, S, et.al, Thymine DNA glycosylase is essential for active DNA demethylation by linked deamination-base excision repair. Cell. 2011 Jul 8;146(1):67-79.) These studies were supported by R01 CA078412 until 2/09, after which they were supported by Pennsylvania DOH until 7/11 when the R01 grant was renewed.

TET family proteins TET1, 2 and 3 are dioxygenases that oxidize 5-methylcytosine to 5-hydroxymethylcytosine (5hmC). TET proteins subsequently convert the 5hmC to 5-formyl-cytosine (5fC) and 5-carboxylcytosine (5caC), and TDG removes 5fC and 5caC opposite G. While potential accessory roles of the glycosylases MED1/MBD4 and SMUG1, and deaminases of the AID/APOBEC family cannot be ruled out completely, the bulk of the currently available data point to the TET-TDG axis as a central component of the pathways mediating active cytosine demethylation via conversion of 5mC to 5hmC, and then sequentially to 5fC and 5caC. Importantly, by immunodot-blot and immunofluorescence, we detected elevated levels of 5caC in cell lines with targeted inactivation or downregulation of TDG, confirming the findings above (Fig. 1A and Fig. 1B).

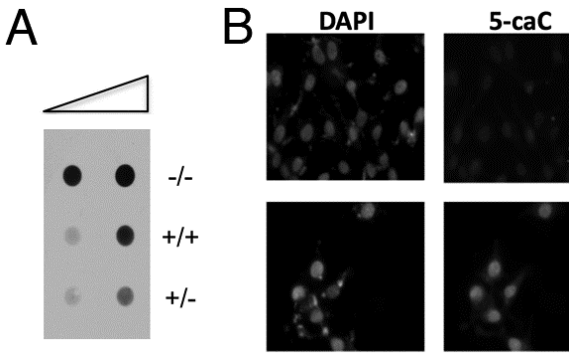

Figure 1. Elevated 5-carboxylcytosine levels associated with targeted inactivation or downregulation of TDG. (A) Decreasing dilutions of genomic DNA from embryos of the indicated Tdg genotype were blotted and detected with antibody anti-5caC. (B) Immuno-fluorescence documenting elevated levels of 5caC in melanoma cell lines infected with sh lentivirus against TDG (C8) or vector control (pLKO).

We also

studied two developmental processes characterized by DNA demethylation: global demethylation of the paternal genome after fertilization and demethylation of the genome of primordial germ cells. For the first process, through appropriate crosses and the employment of our conditional TDG knock-out strain, we have generated male and female mice lacking TDG in the respective gametes. These mice will be used to establish any role of TDG in demethylation of the paternal genome. Furthermore, by employing BLIMP1 transgenic mice, we achieved TDG inactivation in developing primordial germ cells. Embryonal defects were observed in the litter, suggesting a role of TDG in gametogenesis.

Specific Aim 2

We detected low levels of TDG in melanoma and colorectal cancer specimens (Fig. 2). We confirmed that the detected downregulation of TDG is mediated by overexpression of a specific microRNA cluster; in particular, an inverse correlation was found between TDG mRNA levels and miR-29a / miR-29c levels in melanoma cell lines (Fig. 3).

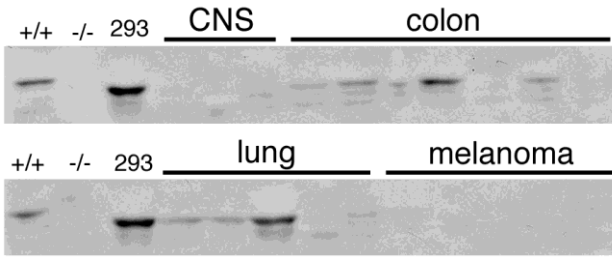

Figure 2. Western blot analysis of thymine DNA glycosylase (TDG) in a portion of the NCI panel of 60 cancer cell lines. +/+ and -/- are the positive and negative control lysates from wild type and Tdg-null MEFs. 293 are an additional positive control.

cell line	TDG	miR29a	miR29c
Daju	1.3	1.1	1.7
Dauv-1	1.5	-1.9	-1.6
Gerlach	1.5	-1.7	-1.3
Lyse	1.5	-1.5	1.1
Mull	1.4	-1.1	-1
Rosi	-1.3	1	1.3
SK28	-1.5	1.4	2.1
SK29	1.2	1	-1.1
G1	2.1	1	-1.4
501 mel	2.4	-3.9	-3.2
888 mel	3.4	-1.7	-1.7
MNT1	1	-1.6	-1.6
Quar	3.9	-3.4	-4.2
T1	2.5	1	-1.4
	Pearson	-0.58	-0.78
	Spearman	-0.6	-0.75

Figure 3. Expression levels and inverse correlation of thymine DNA glycosylase (TDG) mRNA, and miR-29a and miR29c levels, expressed as fold change in comparison to normal human melanocytes in a series of melanoma cell lines.

This Aim also involves an analysis of the effect of double inactivation of MED1 and TDG on intestinal tumor formation associated with the APC Min (multiple intestinal neoplasia) mutation. We are still in the process of conducting the crosses between the TDG- and MED1-mutant mice with the Adenomatous polyposis coli- multiple intestinal neoplasia (APC-Min) mice and fatty-acid-binding proteins (FABP) Cre transgenic mice in order to

generate the TDG+/- MED1+/- FABP-Cre mice that will be interbred with the TDG+/flox MED1+/- Apc-Min mice, in turn, to generate the experimental mice.

Specific Aim 3

We characterized a novel modification of MED1, i.e. sumoylation, that we previously discovered. By using an in vitro sumoylation assay and a mutant recombinant SUMO protein, we have been able to precisely map the three most important sumoylation sites in MED1. A mutant with triple changes at these sites was prepared.

We next conducted experiments in cell culture and made the observation that the pattern and extent of MED1 sumoylation are differentially changed in response to various DNA damaging agents, such as 5-fluorouracil, 5-iododeoxyuridine and N-methyl-N-nitrosourea, suggesting a fine modulation of the response to DNA damage (Fig. 4).

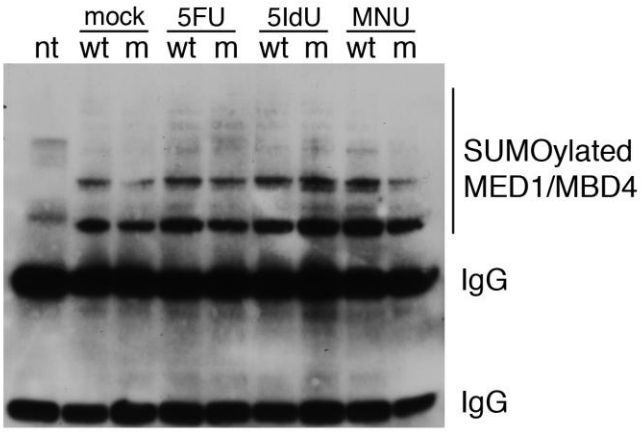

Figure 4. Sumoylation patterns of methyl-CpG binding endonuclease1 (MED1) are affected by type of DNA damage. MCF7 cells were left untransfected (nt) or transfected with HA-tagged wild type MED1 or MED1 with triple mutations at the main sumoylation sites, along with T7-tagged SUMO1. Immuno-precipitations were conducted with anti-T7 antibodies and then blotted with anti-HA antibody. 5FU: 5-fluorouracil; 5IdU: 5-iododeoxyuridine; MNU: N-methyl-N-nitrosourea.
Note: MBD4 is Methyl-CpG-binding domain protein 4.

Specific Aim 4

We identified additional components of the TDG-containing DNA demethylating complex, including the nucleotide excision repair protein, Xeroderma Pigmentosum Complementation Group G (XPG) (in collaboration with Dr. Priscilla Cooper). Also, to better measure DNA demethylation, we developed a novel assay for it, in collaboration with Dr. Robert Sobol (University of Pittsburgh).

The basic assay employs a hairpin-shaped molecular beacon carrying a G:T or G:U mismatch (substrate) and makes use of highly active preparations of recombinant TDG and recombinant Apurinic/apyrimidinic endonuclease (APE). In the folded hairpin substrate, the fluorescence of 6-FAM, used as fluorescent label at the 5' end, is quenched by a dabsyl "black hole" moiety at the 3' end. Upon removal of the mismatched T or U by TDG, and incision of the resulting apurinic/apyrimidinic (AP site) by APE, a short oligonucleotide containing 6-FAM is released. The resulting fluorescence is monitored by real-time qPCR

over a 2-hour incubation period at 37ºC, providing a sensitive and quantitative measurement of repair activity. By using cell-free extracts instead of recombinant enzymes, this assay can be modified to accurately measure the base excision repair activity of extracts.

We reasoned that this assay could be adapted to detect DNA demethylation, if the hairpin substrate was modified to contain a single G:5-methylcytosine (5G:mC) pair in a CpG context. In this case, demethylation would reflect oxidation of 5mC to 5-hydroxymethylcytosine (5hmC) by TET enzymes, and of (a fraction of) 5hmC to 5-formylcytosine (5fC) and 5-carboxylcytosine (5caC), with removal of the two latter bases opposite G by TDG activity. Incision of the AP site by APE activity would trigger the fluorescence readout. We initially applied this assay to extracts from wild type and TDG knock-out mouse embryo fibroblasts (MEFs). Demethylating activity is present in wild type MEF extracts, but is largely absent in TDG knock-out MEFs, indicating that DNA demethylation is largely TDG dependent. Residual background fluorescence in TDG knock-out MEFs may reflect TDG-independent demethylation and/or non-specific processing/degradation of the molecular beacon (Fig. 5).

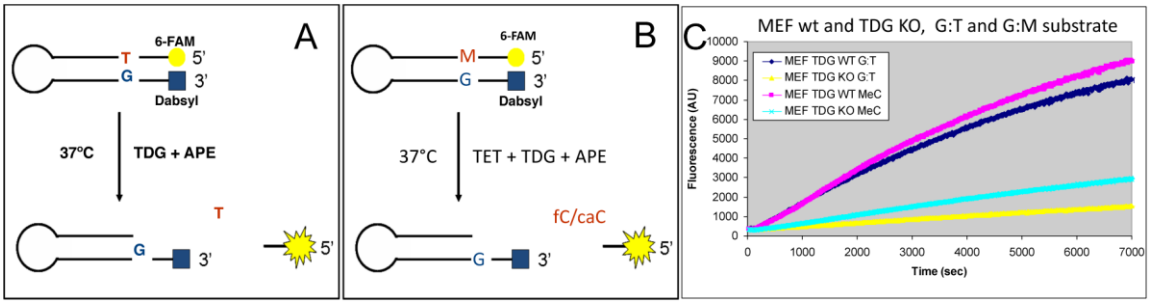

Figure 5. Schematic of the molecular beacon assay for G:T repair (A) and G:M demethylation (B). (C) Activity of extracts from wild type and Tdg knock-out MEFs on G:T and G:M hairpin substrates. Definitions: thymine DNA glycosylase (TDG); Apurinic/apyrimidinic endonuclease (APE); dimethylaminoazobenzenesulfonic acid (Dabsyl); 5-formylcytosine (fC) and 5-carboxylcytosine (caC); Knock-out (KO); Wild Type (wt) Methylcytosin (MeC).

<u>Specific Aim 5</u>

We interbred double heterozygous TDG$^{+/-}$ MED1$^{+/-}$ mice, in order to generate experimental TDG-MED1-double mutant embryos. TDG-MED1-double mutant embryos appear to have a more severe phenotype than TDG-single mutant embryos. We also began experiments to determine the requirement of TDG and MED1 for cellular reprogramming: single- and double-mutant mouse embryo fibroblasts were infected with polycistronic virus expressing the four reprogramming factors (Oct4, Sox2, cMyc, and Klf4). We are currently determining whether the cells generated have indeed properties of induced pluripotent stem cells (iPSCs): to this end, we are conducting teratoma formation assays, in which the generated iPSCs are injected under the kidney capsule of recipient mice. Preliminary results indicate that TDG is

not required for reprogramming of mouse embryo fibroblasts to iPSCs, as assessed by teratoma formation (Fig. 6).

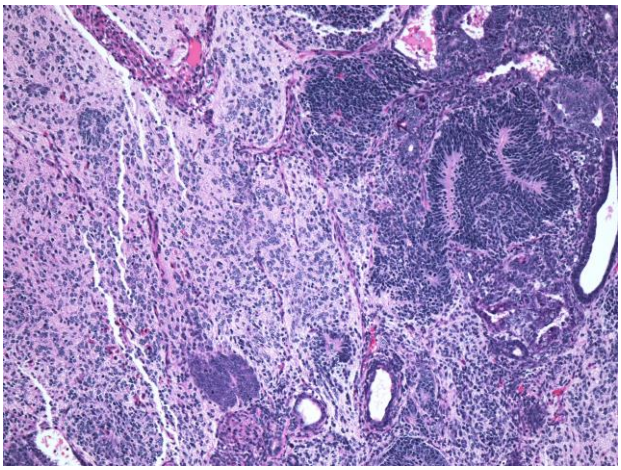

Figure 6. Hematoxylin & eosin staining of a section of a teratoma developed under the kidney capsule of recipient mice from iPS cells derived from TDG knock-out mouse embryo fibroblasts.

Below are the original milestones and our progress with regards to them:

Insert milestone(s) for 1/1/2010-6/30/2010: In the first six months of this project, we will start the characterization of the TDG N140A knock-in mice and the analysis of TDG alterations in human cancer.

Due to embryonic lethality, characterization of the TDG N140A took longer than expected, which caused a partial delay in the analysis of TDG alterations in human cancer.

Insert milestone(s) for 7/1/2010-6/30/2011: In the initial part of this time-frame, we will have conducted an initial characterization of the TDG knock-in strain, as outlined in the original submission of this project. We will start the crosses for the generation of the TDG-MED1-double mutant mice. We will also complete the characterization of MED1 sumoylation and conduct the initial characterization of the structural/functional features of the TDG demethylating complex.

In this period, we completed the characterization of the embryonic lethality associated with homozygosity of the knock-in mice and included the data in the manuscript mentioned above (Cortellino et al. Cell 2011). Mouse crosses were started as planned. We nearly completed the characterization of MED1 sumoylation and a manuscript will be submitted in the next few months. Finally, we characterized the relationship between TDG and AID in the DNA demethylation complex and showed that shRNA-mediated downregulation of TDG leads to reduction of AID levels; these data were included in Cortellino et al. Cell 2011 (Cortellino, S, et.al, Thymine DNA glycosylase is essential for active DNA demethylation by linked deamination-base excision repair. Cell. 2011 Jul 8;146(1):67-79.)

Insert milestone(s) for 7/1/2011-6/30/2012: In the initial part of this time-frame, we will complete the structural/functional characterization of the TDG demethylating complex. In the final six months of this project, we will complete the characterization of the TDG-MED1-double mutant embryos.

In this period, in collaboration with Dr. Priscilla Cooper (Lawrence Berkeley National Laboratory), we showed that XPG forms a stable complex with TDG; these findings will be published with the end of the year. The analysis of TDG-MED1-double mutant embryos has taken longer than anticipated, because the double mutant mice appear to have a more severe phenotype than TDG-single mutant embryos, but in order to be sure about this observation, a large number of embryos need to be analyzed and statistics need to be derived.

Presentations

October 2010	2nd Workshop on Gastrointestinal Oncology, Sarteano, Italy
October 2010	41st Annual Meeting of the Environmental Mutagen Society, Fort Worth, TX
Nov. 2010	AACR Conference on Frontiers in Cancer Prevention Research, Philadelphia, PA
Feb. 2011	Gordon Research Conference on Mammalian DNA Repair, Ventura, CA
Sept. 2011	Meeting of the European Society for Dermatological Research, Barcelona, Spain
October 2011	3rd Workshop on Gastrointestinal Oncology, Avigliano, Italy
October 2011	42nd Annual Meeting of the Environmental Mutagen Society, Montreal, Canada (Chairman of the Symposium: “Epigenetics: DNA Modifications and Repair”)
March 2012	14th National Meeting of Clinical Genetics, Rome, Italy
June 2012	The Third Erling Symposium on DNA Repair, Trondheim and Orland, Norway
August 2012	American Chemical Society Symposium, Philadelphia, PA, "Genome Instability: Mechanisms of Epigenetic Modification”

Abstracts

Bellacosa A. Active DNA demethylation by thymine DNA glycosylase. Abstracts of Papers of the 244th National Fall Meeting of the American-Chemical-Society (ACS). Aug 19-23, 2012, Philadelphia, PA.

Cortellino S, Xu J, Sannai M, Moore R, Caretti E, Cigliano A, Le Coz M, Devarajan K, Wessels A, Soprano D, Abramowitz LK, Bartolomei MS, Rambow F, Bassi MR, Bruno T, Fanciulli M, Renner C, Klein-Szanto AJ, Matsumoto Y, Kobi D, Davidson I, Alberti C, Larue L, Bellacosa A. Active DNA Demethylation by Thymine DNA Glycosylase. Conference: 42nd Annual Meeting of the Environmental-Mutagen-Society on Environmental Impacts on the Genome and Epigenome - Mechanisms and Risks

Location: Montreal, CANADA Date: OCT 15-19, 2011. Published: OCT 2011 in Environmental and Molecular Mutagenesis 52:S14-S, 2011.

18. Extent of Clinical Activities Initiated and Completed. Items 18(A) and 18(B) should be completed for all research projects. If the project was restricted to secondary analysis of clinical data or data analysis of clinical research, then responses to 18(A) and 18(B) should be "No."

18(A) Did you initiate a study that involved the testing of treatment, prevention or diagnostic procedures on human subjects?

_____Yes
___X__No

18(B) Did you complete a study that involved the testing of treatment, prevention or diagnostic procedures on human subjects?

_____Yes
__X___No

If "Yes" to either 18(A) or 18(B), items 18(C) – (F) must also be completed. (Do NOT complete 18(C-F) if 18(A) and 18(B) are both "No.")

18(C) How many hospital and health care professionals were involved in the research project?

_____Number of hospital and health care professionals involved in the research project

18(D) How many subjects were included in the study compared to targeted goals?

_____Number of subjects originally targeted to be included in the study
_____Number of subjects enrolled in the study

Note: Studies that fall dramatically short on recruitment are encouraged to provide the details of their recruitment efforts in Item 17, Progress in Achieving Research Goals, Objectives and Aims. For example, the number of eligible subjects approached, the number that refused to participate and the reasons for refusal. Without this information it is difficult to discern whether eligibility criteria were too restrictive or the study simply did not appeal to subjects.

18(E) How many subjects were enrolled in the study by gender, ethnicity and race?

Gender:
_____Males
_____Females
_____Unknown

Ethnicity:
_____Latinos or Hispanics
_____Not Latinos or Hispanics
_____Unknown

Race:
_____American Indian or Alaska Native
_____Asian
_____Blacks or African American
_____Native Hawaiian or Other Pacific Islander
_____White
_____Other, specify:_____
_____Unknown

18(F) Where was the research study conducted? (List the county where the research study was conducted. If the treatment, prevention and diagnostic tests were offered in more than one county, list all of the counties where the research study was conducted.)

19. Human Embryonic Stem Cell Research. Item 19(A) should be completed for all research projects. If the research project involved human embryonic stem cells, items 19(B) and 19(C) must also be completed.

19(A) Did this project involve, in any capacity, human embryonic stem cells?
_____Yes
___X__ No

19(B) Were these stem cell lines NIH-approved lines that were derived outside of Pennsylvania?
_____Yes
_____ No

19(C) Please describe how this project involved human embryonic stem cells:

20. Articles Submitted to Peer-Reviewed Publications.
20(A) Identify all publications that resulted from the research performed during the funding period and that have been submitted to peer-reviewed publications. Do not list journal abstracts or presentations at professional meetings; abstract and meeting presentations should be listed at the end of item 17. **Include only those publications that acknowledge the Pennsylvania Department of Health as a funding source** (as required in the grant agreement). List the title of the journal article, the authors, the name of the peer-reviewed publication, the month and year when it was submitted, and the status of publication (submitted for publication, accepted for publication or published.). Submit an electronic copy of each publication or paper submitted for publication, listed in the table, in a PDF

version 5.0.5 (or greater) format, 1,200 dpi. Filenames for each publication should include the number of the research project, the last name of the PI, and an abbreviated title of the publication. For example, if you submit two publications for Smith (PI for Project 01), one publication for Zhang (PI for Project 03), and one publication for Bates (PI for Project 04), the filenames would be:

Project 01 – Smith – Three cases of isolated
Project 01 – Smith – Investigation of NEB1 deletions
Project 03 – Zhang – Molecular profiling of aromatase
Project 04 – Bates – Neonatal intensive care

If the publication is not available electronically, provide 5 paper copies of the publication.

Note: The grant agreement requires that recipients acknowledge the Pennsylvania Department of Health funding in all publications. Please ensure that all publications listed acknowledge the Department of Health funding. If a publication does not acknowledge the funding from the Commonwealth, do not list the publication.

Title of Journal Article:	Authors:	Name of Peer-reviewed Publication:	Month and Year Submitted:	Publication Status (check appropriate box below):
1. APC +/- alters colonic fibroblast proteome in FAP	Patel, B.B., Li, X.M., Dixon M.P., Blagoi, E.L., Nicolas, E., Seeholzer, S.H., Cheng, D., He, Y.A., Coudry, R.A., Howard, S.D., Riddle, D.M., Cooper, H.C., Boman, B.M., Conrad, P., Crowell, J.A., **Bellacosa, A.**, Knudson, A., Yeung, A.T., Kopelovich, L.	*Oncotarget*	12/2010	☐Submitted ☐Accepted ☒Published
2. Thymine DNA glycosylase is essential for active DNA demethylation by linked deamination-base excision repair.	Cortellino, S., Xu, J., Sannai, M., Moore, R., Caretti, E., Cigliano, A., Le Coz, M., Devarajan, K., Wessels, A., Soprano, D.,	*Cell*	2/2011	☐Submitted ☐Accepted ☒Published

	Abramowitz, L. K., Bartolomei, M.S. Rambow, F., Bassi, M.R., Bruno, T., Fanciulli, M., Renner, C., Klein-Szanto, A.J., Matsumoto, Y., Kobi, D., Davidson, I., Alberti, C., Larue, L., **Bellacosa, A.**			
3. Developmental disease and cancer: biological and clinical overlaps	**Bellacosa A**.	*Am J Med Genet A*	9/2013	☐Submitted ☐Accepted ☒Published

20(B) Based on this project, are you planning to submit articles to peer-reviewed publications in the future?

Yes___X_____ No_____

If yes, please describe your plans:

We plan to submit a manuscript on MED1 sumoylation and on the TDG-XPG interaction in the next six months.

We plan to submit a manuscript on the role of TDG in demethylation during gametogenesis in the next twelve months.

We plan to submit manuscripts on the role of TDG and MED1 in tumorigenesis and reprogramming in the next eighteen months.

21. Changes in Outcome, Impact and Effectiveness Attributable to the Research Project. Describe the outcome, impact, and effectiveness of the research project by summarizing its impact on the incidence of disease, death from disease, stage of disease at time of diagnosis, or other relevant measures of outcome, impact or effectiveness of the research project. If there were no changes, insert "None"; do not use "Not applicable." Responses must be single-spaced below, and no smaller than 12-point type. DO NOT DELETE THESE INSTRUCTIONS. There is no limit to the length of your response.

The outcome and impact of the findings obtained in the course of this grant are substantial. Our observations suggest that TDG may unexpectedly regulate both genomic and

epigenomic stability at CpG sites. In particular, we clarified the previously ill-defined process of DNA demethylation in mammals. A better understanding of the role of TDG and other factors in the induction of DNA demethylation has several implications: i) from the basic research standpoint, it suggests that DNA repair and transcriptional control are closely linked; ii) it is likely to augment our perspectives on epigenetic reprogramming, a critical process that would permit the generation of pluripotent stem cells from adult tissues; iii) it would allow insights into the epigenetic changes that invariably accompany neoplastic transformation and may lead to novel diagnostic, prognostic and therapeutic strategies; iv) it suggests that we may harness nuclear hormone receptor signaling to achieve and maintain differentiation states in chemopreventive or chemotherapeutic settings.
We also clarified the role of MED1 sumoylation in the response to DNA damage. We anticipate that our studies will uncover the mechanisms by which endogenous mutagenesis by deamination is counteracted in mammalian cells, and will have immediate implications for cancer biology. Indeed, failure of these repair systems and acquisition of a mutator phenotype at CpG sites or loss of the epigenetic control afforded by CpG methylation may be critical for cancer formation. In the future, such knowledge might suggest innovative cancer prevention or therapeutic strategies.

22. Major Discoveries, New Drugs, and New Approaches for Prevention Diagnosis and Treatment. Describe major discoveries, new drugs, and new approaches for prevention, diagnosis and treatment that are attributable to the completed research project. If there were no major discoveries, drugs or approaches, insert "None"; do not use "Not applicable." Responses must be single-spaced below, and no smaller than 12-point type. DO NOT DELETE THESE INSTRUCTIONS. There is no limit to the length of your response.

We defined the role of TDG in DNA demethylation, a fundamental finding that may have important wide-spread implications for the control of developmental disease and cancer.

23. Inventions, Patents and Commercial Development Opportunities.

23(A) Were any inventions, which may be patentable or otherwise protectable under Title 35 of the United States Code, conceived or first actually reduced to practice in the performance of work under this health research grant? Yes_____ No___X_____

If "Yes" to 23(A), complete items a – g below for each invention. (Do NOT complete items a - g if 23(A) is "No.")

a. Title of Invention:

b. Name of Inventor(s):

c. Technical Description of Invention (describe nature, purpose, operation and physical, chemical, biological or electrical characteristics of the invention):

d. Was a patent filed for the invention conceived or first actually reduced to practice in the performance of work under this health research grant?
Yes_____ No____

If yes, indicate date patent was filed:

e. Was a patent issued for the invention conceived or first actually reduced to practice in the performance of work under this health research grant?
Yes_____ No____
If yes, indicate number of patent, title and date issued:
Patent number:
Title of patent:
Date issued:

f. Were any licenses granted for the patent obtained as a result of work performed under this health research grant? Yes_____ No____

If yes, how many licenses were granted?_____

g. Were any commercial development activities taken to develop the invention into a commercial product or service for manufacture or sale? Yes___ No____

If yes, describe the commercial development activities:

23(B) Based on the results of this project, are you planning to file for any licenses or patents, or undertake any commercial development opportunities in the future?

Yes_____ No_____

If yes, please describe your plans:

24. Key Investigator Qualifications. Briefly describe the education, research interests and experience and professional commitments of the Principal Investigator and all other key investigators. In place of narrative you may insert the NIH biosketch form here; however, please limit each biosketch to 1-2 pages. *For Nonformula grants only – include information for only those key investigators whose biosketches were not included in the original grant application.*

See below.

BIOGRAPHICAL SKETCH

NAME	POSITION TITLE
Alfonso Bellacosa, M.D., Ph.D.	Professor
eRA COMMONS USER NAME (credential, e.g., agency login) abellacosa	

EDUCATION/TRAINING *(Begin with baccalaureate or other initial professional education, such as nursing, include postdoctoral training and residency training if applicable.)*

INSTITUTION AND LOCATION	DEGREE *(if applicable)*	MM/YY	FIELD OF STUDY
University of Naples Medical School, Second Policlinico, Naples, Italy	M.B.Ch.B.	06/82	Medicine
Catholic University Medical School, Rome	M.D.	07/88	Medicine
Fox Chase Cancer Center, Philadelphia, PA	Postdoctoral Fellow	06/92	Molecular Oncology
University of Paris, France	Ph.D.	10/04	Genetics

POSITIONS

Undergraduate Intern, Departments of Microbiology,Hematology, and Human Genetics, Catholic University, Rome	1982-1985
Student Assistant, Fox Chase Cancer Center, Philadelphia, PA	1987
Clinical Intern, Department of Hematology, Catholic University, Rome	1988
Postdoctoral Fellow, Fox Chase Cancer Center, Philadelphia, PA	1989-1992
Research Associate, Department of Medical Genetics, Catholic University, Rome	1992-1995
Visiting Scientist, Fox Chase Cancer Center, Philadelphia, PA	1995-1996
Assistant Member, Fox Chase Cancer Center, Philadelphia, PA	1996-1998
Associate Member, Fox Chase Cancer Center, Philadelphia, PA	1998-2003
Adjunct Associate Professor, Department of Microbiology, Temple University, Philadelphia, PA	2001-present
Adjunct Associate Professor, Department of Biochemistry, Drexel University College of Medicine, Philadelphia, PA	2004-present
Associate Professor (Member with Tenure), Fox Chase Cancer Center	2004-2013
Professor, Cancer Epigenetics Program, Fox Chase Cancer Center, Temple University Health System, Philadelphia, PA	2013-present

HONORS

Diplomate of the Italian Board of Medicine	1988
Member of the Italian Assoc. of Medicine and the Italian Assoc. of Human Genetics	1988
M.D., 110/110 *summa cum laude*	1988
Postdoctoral Fellowship, Lawrence Greenwald Foundation for Research on Leukemia and Lymphoma	1989-1991
Fellowship from the Italian Association for Cancer Research	1992
Diplomate of the Postgraduate School of Hematology of Catholic University, Rome, *summa cum laude*	1992
"Sir Paul Girolami" Award for Innovative Research in Biology and Medicine, Glaxo	1993
Member of the Italian Group for the Study of Hereditary Non-Polyposis Colorectal Cancer	1994
Grant from the Scientific Exchange Program of NCI and Italian Natl Council of Research	1995

SELECTED PEER-REVIEWED PUBLICATIONS

Petronzelli, F., Riccio, A., Markham, G.D., Seeholzer, S.H., Stoerker, J., Yeung, A.T., Matsumoto Y., **Bellacosa, A.** Biphasic kinetics of the human DNA repair protein MED1 (MBD4), a mismatch-specific DNA *N*-glycosylase. *J. Biol. Chem*. **275**:32422-32429, 2000.

Testa, J.R., **Bellacosa, A.** AKT plays a central role in tumorigenesis. *Proc. Natl. Acad. Sci. U.S.A.* **98**:10983-10985, 2001.

Cortellino, S., Turner, D., Masciullo, V., Schepis, F., Albino, D., Daniel, R., Skalka, A.M., Meropol, N.J., Alberti, C., Larue, L., Bellacosa, A. **The base excision repair enzyme MED1 mediates DNA damage response to antitumor drugs and is associated with mismatch repair system integrity. *Proc. Natl. Acad. Sci. U.S.A.*** 100**:15071-15076, 2003.**

Turner, D.P., Cortellino, S., Schupp, J.E., Loh, T., Kinsella, T.J., **Bellacosa, A.** The DNA N-glycosylase MED1 exhibits preference for halogenated pyrimidines and is involved in the cytotoxicity of 5-iododeoxyuridine. *Cancer Res*. **66**:7686-7693, 2006.

Yeung, A.T., Patel, B.B., Li, X.M., Seeholzer, S.H., Coudry, R.A., Cooper, H.S., **Bellacosa, A.**, Boman, B.M., Zhang, T., Litwin, S., Ross, E.A., Conrad, P., Crowell, J.A., Kopelovich, L., Knudson, A. One-hit effects in cancer: Altered proteome of morphologically normal colon crypts in Familial Adenomatous Polyposis. *Cancer Res*. **68**:7579-7586, 2008.

Cortellino, S., Wang, C., Wang, B., Bassi, M.R., Caretti, E., Champeval, D., Calmont, A., Jarnik, M., Burch, J., Zaret, K., Larue, L., **Bellacosa, A.** Defective ciliogenesis, embryonic lethality and severe impairment of the Sonic Hedgehog pathway caused by inactivation of the mouse complex A intraflagellar transport gene Ift122/Wdr10, partially overlapping with the DNA repair gene Med1/Mbd4. *Dev. Biol*. **325**:225-237, 2009.

Bellacosa, A., Godwin, A.K., Peri, S., Devarajan, K., Caretti, E., Vanderveer, L., Bove, B., Slater, C., Zhou, Y., Daly, M., Howard, S., Campbell, K., Nicolas, E., Yeung, A.T., Clapper, M.L., Crowell, J.A., Lynch, H.T., Ross, E., Kopelovich, L., Knudson, A.G. Altered gene expression in morphologically normal epithelial cells from heterozygous carriers of BRCA1 or BRCA2 mutations. *Cancer Prev. Res*. **3**:48-61, 2010.

Patel, B.B., Li, X.M., Dixon M.P., Blagoi, E.L., Nicolas, E., Seeholzer, S.H., Cheng, D., He, Y.A., Coudry, R.A., Howard, S.D., Riddle, D.M., Cooper, H.C., Boman, B.M., Conrad, P., Crowell, J.A., **Bellacosa, A.**, Knudson, A., Yeung, A.T., Kopelovich, L. APC +/- alters colonic fibroblast proteome in FAP. *Oncotarget* **2**:209-208, 2011.

Cortellino, S., Xu, J., Sannai, M., Moore, R., Caretti, E., Cigliano, A., Le Coz, M., Devarajan, K., Wessels, A., Soprano, D., Abramowitz, L. K., Bartolomei, M.S. Rambow, F., Bassi, M.R., Bruno, T., Fanciulli, M., Renner, C., Klein-Szanto, A.J., Matsumoto, Y., Kobi, D., Davidson, I., Alberti, C., Larue, L., **Bellacosa, A.** Thymine DNA glycosylase is essential for active DNA demethylation by linked deamination-base excision repair. *Cell* **146**:67-79, 2011.

Dalton, S.R., **Bellacosa, A.** DNA demethylation by TDG. *Epigenomics* **4**:459-67, 2012.

Grigera F, **Bellacosa A**, Kenter AL. Complex relationship between mismatch repair proteins and MBD4 during immunoglobulin class switch recombination. *PloS One* **8**, 2013.

Bellacosa A. Developmental disease and cancer: biological and clinical overlaps. *Am J Med Genet A*, **161**:2788-96, 2013.

Li P, Du F, Yuelling LW, Lin T, Muradimova RE, Tricarico R, Wang J, Enikolopov G, **Bellacosa A**, Wechsler-Reya RJ, Yang ZJ. A population of Nestin-expressing progenitors in the cerebellum exhibits increased tumorigenicity. *Nat Neurosci.* **16**:1737-44, 2013.