Final Progress Report for Research Projects Funded by Health Research Grants

Instructions: Please complete all of the items as instructed. Do not delete instructions. Do not leave any items blank; responses must be provided for all items. If your response to an item is "None", please specify "None" as your response. "Not applicable" is not an acceptable response for any of the items. There is no limit to the length of your response to any question. Responses should be single-spaced, no smaller than 12-point type. The report **must be completed using MS Word**. Submitted reports must be Word documents; they should not be converted to pdf format. Questions? Contact Health Research Program staff at 717-783-2548.

1. **Grantee Institution:** Drexel University

2. **Reporting Period (start and end date of grant award period):** 1/1/2009 - 12/31/2010

3. **Grant Contact Person (First Name, M.I., Last Name, Degrees):** Anne Martella

4. **Grant Contact Person's Telephone Number:** (215) 895-6471

5. **Grant SAP Number:** 4100047631

6. **Project Number and Title of Research Project:** *8 - RNA Interference-based Therapy for HIV-1 Associated Neurologic Disease -*

7. **Start and End Date of Research Project:** 1/1/2009 – 6/30/2010

8. **Name of Principal Investigator for the Research Project:** Laura Steel, PhD

9. **Research Project Expenses**.

   9(A) Please provide the amount of health research grant funds spent on this project for the entire duration of the grant, including any interest earned that was spent:

   $ 112,500

   9(B) Provide the last names (include first initial if multiple individuals with the same last name are listed) of **all** persons who worked on this research project and were supported with health research funds. Include position titles (Principal Investigator, Graduate Assistant, Post-doctoral Fellow, etc.), percent of effort on project and total health research funds expended for the position. For multiple year projects, if percent of effort varied from year to year, report in the % of Effort column the effort by year 1, 2, 3, etc. of the project (x% Yr 1; z% Yr 2-3).

Last Name	Position Title	% of Effort on Project	Cost
Steel	Assistant Professor	23%	$22,670
Kutzler	Assistant Professor	13%	$13,850
Sanghvi	Ph.D. student	50%	$14,500
Sylvester	Research Technician	8%	$ 3,400

9(C) Provide the names of **all** persons who worked on this research project, but who *were not* supported with health research funds. Include position titles (Research Assistant, Administrative Assistant, etc.) and percent of effort on project. For multiple year projects, if percent of effort varied from year to year, report in the % of Effort column the effort by year 1, 2, 3, etc. of the project (x% Yr 1; z% Yr 2-3).

Last Name	Position Title	% of Effort on Project
Gupta	Ph.D. student, rotation	100%
Pershing	Ph.D. student, rotation	50%
Cox	summer intern	50%
Miamidian	M.D./Ph.D. student	20%

9(D) Provide a list of **all** scientific equipment purchased as part of this research grant, a short description of the value (benefit) derived by the institution from this equipment, and the cost of the equipment.

Type of Scientific Equipment	Value Derived	Cost
None		

10. Co-funding of Research Project during Health Research Grant Award Period. Did this research project receive funding from any other source during the project period when it was supported by the health research grant?

Yes_____ No___X___

If yes, please indicate the source and amount of other funds:

11. Leveraging of Additional Funds

11(A) As a result of the health research funds provided for this research project, were you able to apply for and/or obtain funding from other sources to continue or expand the research?

Yes_____ No___x_____

If yes, please list the applications submitted (column A), the funding agency (National Institutes of Health—NIH, or other source in column B), the month and year when the application was submitted (column C), and the amount of funds requested (column D). If

you have received a notice that the grant will be funded, please indicate the amount of funds to be awarded (column E). If the grant was not funded, insert "not funded" in column E.

Do not include funding from your own institution or from CURE (tobacco settlement funds). Do not include grants submitted prior to the start date of the grant as shown in Question 2. If you list grants submitted within 1-6 months of the start date of this grant, add a statement below the table indicating how the data/results from this project were used to secure that grant.

A. Title of research project on grant application	B. Funding agency (check those that apply)	C. Month and Year Submitted	D. Amount of funds requested:	E. Amount of funds to be awarded:
None	☐NIH ☐ Other federal (specify:_____) ☐ Nonfederal source (specify: _____)		$	$

11(B) Are you planning to apply for additional funding in the future to continue or expand the research?

Yes___X____ No_____

If yes, please describe your plans:

We expect to apply for funding from the NIH in the spring or summer of 2011, through either the R21 or R01 grant mechanism.

12. Future of Research Project. What are the future plans for this research project?

This project is continuing in an expanded and slightly redirected form with additonal CURE funding. As we refine our approach in using the tools developed in these projects, we expect to be able to submit a grant proposal for federal funding (see item 11). In addition, we are in the process of completing experiments for the submission of at least two publications based on work supported by the CURE funds.

13. New Investigator Training and Development. Did students participate in project supported internships or graduate or post-graduate training for at least one semester or one summer?

Yes___X___ No_____

If yes, how many students? Please specify in the tables below:

	Undergraduate	Masters	Pre-doc	Post-doc
Male			2	
Female	1		2	
Unknown				
Total	**1**		**4**	

	Undergraduate	Masters	Pre-doc	Post-doc
Hispanic				
Non-Hispanic	1		4	
Unknown				
Total	**1**		**4**	

	Undergraduate	Masters	Pre-doc	Post-doc
White	1		2	
Black				
Asian				
Other			2	
Unknown				
Total	**1**		**4**	

14. **Recruitment of Out-of–State Researchers**. Did you bring researchers into Pennsylvania to carry out this research project?

    Yes_____ No___X_____

    If yes, please list the name and degree of each researcher and his/her previous affiliation:

15. **Impact on Research Capacity and Quality**. Did the health research project enhance the quality and/or capacity of research at your institution?

    Yes___X_____ No_____

    If yes, describe how improvements in infrastructure, the addition of new investigators, and other resources have led to more and better research.

    This work has led to an active and fruitful collaboration between the laboratories of Dr. Laura Steel (P.I. on this project) in the Dept of Microbiology and Immunology and Dr. Michele Kutzler (Co-P.I.) in the Dept of Medicine at the Drexel University College of Medicine. Their complementary skills and interests in the areas of molecular biology and immunology as applied to the development of anti-viral therapeutics and vaccines, particularly for HIV-1 and HCV, will lead to further productive collaborations in additional project areas. Both investigators have expanded their knowledge of and access to experimental tools and systems in ways that will be invaluable in future investigations. In addition, students in both laboratories have been able to benefit from the combined knowledge base and resources of both of the investigators.

A Ph.D. student (V. Sanghvi) who has contributed to the work on this project had the opportunity to present his research as a poster presentation at two international meetings (see Research Summary, below). Based on his work, he was awarded a scholarship for attendance at both meetings.

16. Collaboration, business and community involvement.

16(A) Did the health research funds lead to collaboration with research partners outside of your institution (e.g., entire university, entire hospital system)?

Yes____X_____ No_____

If yes, please describe the collaborations:

Funding provided by this grant for the work carried out in this proposal helped to support collaboration with investigators at the University of Pennsylvania in the laboratory of David Weiner, PhD (Department of Pathology and Laboratory Medicine) that included some technical expertise and methodology help, as well supported the use of core facilities at the University of Pennsylvania. This collaboration allowed us to work with new investigators in this area and fostered new ideas and methodologies that helped to support work carried out in this study.

16(B) Did the research project result in commercial development of any research products?

Yes_____ No____X____

If yes, please describe commercial development activities that resulted from the research project:

16(C) Did the research lead to new involvement with the community?

Yes_____ No___X_____

If yes, please describe involvement with community groups that resulted from the research project:

17. Progress in Achieving Research Goals, Objectives and Aims.

List the project goals, objectives and specific aims (as contained in the grant application's strategic plan). Summarize the progress made in achieving these goals, objectives and aims <u>for the entire grant award period.</u> Indicate whether or not each goal/objective/aim was achieved; if something was not achieved, note the reasons why. Describe the methods used. If changes were made to the research goals/objectives/aims, methods, design or timeline since the original grant application was submitted, please describe the changes. <u>Provide detailed results of the project.</u> Include evidence of the data that was generated and analyzed,

and provide tables, graphs, and figures of the data. List published abstracts, poster presentations and scientific meeting presentations at the end of the summary of progress; peer-reviewed publications should be listed under item 20.

This response should be a DETAILED report of the methods and findings. It is not sufficient to state that the work was completed. Insufficient information may result in an unfavorable performance review, which may jeopardize future funding. If research findings are pending publication you must still include enough detail for the expert peer reviewers to evaluate the progress during the course of the project.

Health research grants funded under the Tobacco Settlement Act will be evaluated via a performance review by an expert panel of researchers and clinicians who will assess project work using this Final Progress Report, all project Annual Reports and the project's strategic plan. After the final performance review of each project is complete, approximately 12-16 months after the end of the grant, this Final Progress Report, as well as the Final Performance Review Report containing the comments of the expert review panel, and the grantee's written response to the Final Performance Review Report, will be posted on the CURE Web site.

There is no limit to the length of your response. Responses must be single-spaced below, no smaller than 12-point type. If you cut and paste text from a publication, be sure symbols print properly, e.g., the Greek symbol for alpha (α) and beta (ß) should not print as boxes (□) and include the appropriate citation(s). DO NOT DELETE THESE INSTRUCTIONS.

Summary of Research Completed:

The goal of this project was to answer the question "Can Tat-inducible expression of interfering RNAs designed to silence the expression of the MCP-1 receptor (CCR2) in infected macrophages inhibit their migratory response to MCP-1?" Major progress towards this goal was made in the following areas: 1) characterization of the activity of the Tat-inducible promoter, including in virus infected cells; 2) construction and evaluation of microRNAs (miRNAs) that silence CCR2 mRNA; 3) construction of lentiviral vectors for the expression of Tat-inducible miRNAs; 4) development of cell migration assays to test the effects of CCR2 knockdown. The work has resulted in the submission of a manuscript for publication and the successful funding of an additional project to continue and expand the scope of the work. These results are described in more detail below.

1. Characterization of the activity of the Tat-inducible promoter. The chimeric, Tat-inducible RNA polymerase II promoter that we refer to as the CK-TAR promoter is an essential element in our strategy. It comprises the chicken β-actin core promoter fused to the HIV-1 TAR element. The design of this promoter was initially reported in 1991 by Han et al. (Nucl. Acids Res. 19,7225-9), but it has not been used since then for the development of HIV-1 therapeutics. We have now constructed this chimeric promoter and characterized it with regard to its value in expressing miRNAs for the purpose of suppressing the expression

of cellular gene products that are necessary for viral replication or pathogenesis. It is advantageous to suppress these gene products only in infected cells, since therapeutic viral vectors will most likely be delivered broadly, to both infected and uninfected cells, and it will be necessary to avoid disturbing cellular functions in the uninfected cell population. The HIV-1 viral LTR is highly responsive to induction by Tat and has been used by several groups in the construction of anti-viral vectors. However, we expect that the CK-TAR promoter will provide an alternative promoter that is less susceptible to risks associated with vector mobilization and the generation of replication competent lentiviruses when used in the context of therapeutic vectors. We have characterized the CK-TAR promoter, comparing its performance to the viral LTR with regard to induction by Tat as well as its induction by additional cell stimuli that may be encountered by uninfected cells. In these experiments, we have used miRNAs that target the reporter EGFP mRNA (enhanced green fluorescent protein) and miRNAs that target the HIV-1 protein Gag. Both of these are well-characterized miRNAs with strong silencing activities.

To test the induction of the CK-TAR promoter by HIV-1 Tat, Jurkat cells (a T-cell line that is relevant to HIV-1 infection) were transfected with plasmids that use either the viral LTR or the CK-TAR promoter to express miGag, together with a reporter construct where the target site for miGag has been inserted into the 3'-untranslated region (3'UTR) of a gene encoding Renilla luciferase (Rluc). Additionally, the transfection included an expression plasmid for Tat, or an inactive mutant of Tat (K41A). Silencing is measured by a reduction in Rluc activity relative to firefly luciferase (Fluc) expressed independently from the same reporter plasmid. Results shown in Figure 1 demonstrate that Tat can induce silencing of the reporter to similar levels when miGag expression is driven by the LTR or the CK-TAR promoter.

In further experiments, shown in Figure 2A, we demonstrated that the level of Tat produced by replicating virus is sufficient to induce strong silencing by miGag driven from the CK-TAR promoter. Silencing induced from the CK-TAR promoter is comparable to that from the LTR or from the constitutively active CMV (cytomegalovirus) promoter. Here, HEK-293T cells were co-transfected with the indicated silencing plasmids together with an infectious molecular clone encoding HIV-1, strain LAI. Production of infectious virus was monitored by β-galactosidase assay after infection of the reporter cell line, Magi P4R5, with equal amounts of culture supernatant from the transfected cells. Similar results were obtained in experiments in Jurkat cells where reductions in the production of infectious virus was measured by the P4R5 reporter assay (Figure 2B) or silencing of the gag gene was measured by p24 (HIV-1 Gag protein) ELISA of lysates of the transfected cells (Figure 2C). In Figure 2D, we show that reductions in virus replication are not simply due to competition for essential transcription factors resulting from overexpression of the TAR element from the CK-TAR promoter since production of an irrelevant miRNA (miEGFP) from this promoter does not lead to significant reductions in the production of infectious virus.

It is our longterm goal to use the CK-TAR promoter to drive the expression of silencing RNAs that target cellular RNAs (such as the CCR2 mRNA) that contribute to HIV-1 pathology. Since the silencing constructs will be delivered broadly to cells of the immune system, it is important that the silencing RNAs are only expressed in infected cells, so that healthy immune cells are not affected. We show in Figure 3 that there is minimal induction

of the CK-TAR promoter by agents such as LPS (lipopolysacchride), PMA (phorbol 12-myristate 13-acetate), and TNFα (tumor necrosis factor α). In the experiments shown in Figure 3A, HEK-293T cells were co-transfected with plasmids expressing EGFP and a silencing plasmid expressing miEGFP from either the viral LTR or the CK-TAR promoter; cells were then treated with the indicated agents. Transfection with the Tat expression plasmid, pTat, is shown as a control for induction of silencing. It is evident that LPS can induce moderate levels of activity from both the viral LTR and the CK-TAR promoter, but little or no CK-TAR activity was induced by either PMA or TNFα. Similar results were observed in Jurkat cells (Figure 3B and C).

Publication: The above results have been submitted for publication in a manuscript entitled "Expression of interfering RNAs from an HIV-1 Tat-inducible chimeric promoter", by Viraj R. Sanghvi and Laura F. Steel.

2. Construction and evaluation of plasmids that express microRNAs (miRNAs) that silence CCR2 mRNA. The CCR2-miRNA sequence was selected from a set of four potential silencing vectors present in the Open Biosystems shRNAmir Expression-Arrest™ library and available from the Drexel University RNAi Resource Center. This early generation library is constructed in a pSM2 vector background that renders it somewhat unstable during growth in bacterial cells. Therefore, our first step in analyzing candidates from this library was to move the CCR2-miRNA region, together with a U6 RNA polymerase III promoter, into a simpler pUC19-based plasmid vector (see Figure 4). This was done using standard DNA cloning techniques and results were confirmed by DNA sequence analysis. Three plasmids were chosen for further analysis since we found that one of the original library constructs encoded an miRNA with no homology to the CCR2 mRNA. These were designated pUC-U6-CCR2-B, -C, and -D.

In order to test the silencing efficacy of the three candidate CCR2-miRNAs, we inserted CCR2 target sequence into a dual luciferase reporter plasmid, psiCHECK2 (Promega). In this plasmid, target sequence encoding a region derived from the human CCR2 mRNA was inserted into the 3'-untranslated region (3'UTR) of a Renilla luciferase expression cassette. Firefly luciferase is expressed independently from the same plasmid and serves as a transfection efficiency control. After co-transfection of mammalian cells (HEK-293T) with the reporter plasmid and a candidate CCR2-miRNA expression plasmid, silencing was evaluated as the ratio of the activities of Rluc to Fluc in lysates made from cells 2 days post-transfection. In these experiments, we were able to identify one of the three candidate miRNAs (miCCR2-D) that showed silencing of up to 50% of the reporter activity (see Figure 5), and we have proceeded with further experiments using this CCR2-miRNA. It is possible that in the future we will seek additional CCR2-miRNAs with more potent silencing activity.

We next examined the silencing activity of the CCR2-miRNA under conditions where it is expressed from RNA polymerase II (pol II) promoters, including promoters that are inducible by the HIV-1 Tat protein. DNA encoding the CCR2-D miRNA was re-cloned into a new vector backbone, designed in our laboratory, that is suitable for pol II expression. As illustrated in Figure 6, four different plasmids were made, where expression of the miRNA is driven from either a CMV-IE promoter, an HIV-1 LTR, a CK-TAR promoter, or a

CKnoTAR promoter. The CMV promoter will be constitutively active and serves as a control; the HIV-1 LTR is a promoter that is highly inducible by Tat; the CK-TAR promoter is a hybrid promoter comprised of a chicken β-actin core promoter (CK) and the HIV-1 TAR region that is also inducible by Tat; the CKnoTAR promoter is the CK promoter without the HIV-1 TAR region and is expected to be relatively unresponsive to Tat. A fifth plasmid, where an miRNA targeting the mRNA of enhanced green fluorescent protein (EGFP) is expressed from a CMV promoter (see Figure 6), was used as an additional control.

Mammalian cells (HEK-293T) were transfected with two different doses of each of these plasmids together with a constant amount of the psiCH-CCR2 reporter plasmid. Each transfection was done in the presence or absence of an HIV-1 Tat expression vector (pTat) in order to assess the extent to which silencing activity could be induced by Tat. As before, lysates made from transfected cells were assayed for Rluc and Fluc activity and results (see Figure 7) were plotted as a percent of the Rluc/Fluc activity found in cells in the absence of any silencing plasmid. Controls included a test of the original pol III driven CCR2-miRNA plasmid (pU6-miCCR2) and a similar plasmid that expresses an miRNA targeting EGFP mRNA (pU6-miEGFP). We found that the HIV-1 LTR and the CK-TAR promoter were both strongly inducible by Tat, while showing relatively little silencing activity in the absence of Tat. Silencing by these promoters was inducible to levels comparable to those seen using the strong, constitutive pol III promoter, U6. Both the CMV promoter and the CKnoTAR promoter showed a low degree of Tat inducible silencing, but that might be expected from the general transcriptional activation properties of Tat.

3. Construction of lentiviral vectors for the expression of Tat-inducible miRNAs. To prepare a lentiviral vector for insertion of the inducible miRNA constructs, we have combined portions of the commercial vectors, pLEX-MCS and pGIPZ (Open Biosystems), as outlined in Figure 8. The new vector, pLEX-GFP, contains a CMV promoter for constitutive expression of turboGFP (tGFP) and puromycin resistance ($Puro^R$). These markers will be used to both track and select for transduced cells. In addition, the shRNAmir sequence present in pGIPZ has been eliminated, and we will instead use a unique XbaI site as a point of insertion for gene cassettes encoding CMV, CK-TAR, and CKnoTAR CCR2-miRNAs.

We have used the pLEX-GFP vector to construct a series of lentiviral vectors with the following promoter-miRNA expression cassettes: CMV-miFlu (control), CMV-miCCR2-DE, CK-TAR-miCCR2-DE, CMV-miGag, CK-TAR-miGag. These vectors are depicted in Figure 9. The miCCR2-DE vectors express a bi-cistronic miRNA (comprising miCCR2-D and miCCR2-E) that targets CCR2 mRNA that was developed in related work in a separate project. The miGag vectors express a potent miRNA that directly targets HIV-1 miRNAs; these vectors, together with the miFlu vector, will be used in control experiments. The constructs have been packaged using a VSV-G pseudovirus system and are now being tested for their ability to transduce immune cell populations, including monocytes and T-cells. This work is ongoing and is now included in a related project.

4. Establishment of a cell migration assay. To test the physiological relevance of the knock-down of CCR2 in miRNA-transfected cells, we utilized chemotaxis assays as a functional measurement of CCR2 activity. In Figure 10, we show that we have established that U937

(monocytic) cells respond and chemotax towards MCP-1 protein. U937 cells were placed in the upper wells of 5mm Transwell plates (1 X 10(6)/well), while bottom wells contained medium alone or medium with recombinant human MCP-1 (5 or 15 ng/ml). After incubation at 37°C for 2 hrs or 6 hrs, migrated cells in the lower chamber from multiple replicate wells (6 wells per each condition, three independent trials) were collected and counted. The data are graphed as Migration Index (MI) which represents the fold increase in the number of cells migrated in experimental wells divided by the number of cells migrated in background, medium control wells. Data generated from the independent experiments and replicate wells were averaged and results are shown in Figure 10. Using this chemotaxis system, we will be able to test whether Tat-inducible expression of interfering RNAs designed to silence the expression of the MCP-1 receptor (CCR2) in infected macrophages inhibit their migratory response to MCP-1.

The overall specific aim of this grant was to answer the question: Can Tat-inducible expression of interfering RNAs designed to silence the expression of the MCP-1 receptor (CCR2) in infected macrophages inhibit their migratory response to MCP-1? We sought to approach this question in two parts: a) Design and test the efficacy of miRNAs that target the MCP-1 (CCL2) receptor, CCR2, and b) Determine whether Tat-induced silencing of CCR2 on macrophages is sufficient to reduce their migratory response to CCL2. We made significant progress towards these goals, but progress was slowed by difficulties we have encountered in silencing endogenous CCR2 mRNA, despite the promising results of our initial testing using a reporter system (see above). Nevertheless, we completed a detailed characterization of the CK-TAR promoter that will allow us to use our inducible expression system in silencing additional cellular or viral RNAs. In addition, we are seeking to improve our silencing of the CCR2 mRNA. We have generated the lentiviral vectors that will be necessary to test our silencing system in cell types that are relevant to HIV-1 infection, and we have developed assays for cell migration that we will use as we continue to pursue questions raised in this project.

Project Presentations:

Posters:
Research Day, Drexel University 2009; HIV-1 Tat dependent expression of interfering RNAs using a chimeric promoter containing the HIV-1 TAR element. Viraj R. Sanghvi, B. Barbara Diaz, Archana Gupta, and Laura F. Steel.

Discovery Day, Drexel University 2009; Expression of interfering RNAs from a chimeric, HIV-1 Tat-inducible RNA Pol II promoter. Viraj R. Sanghvi, Albert Sylvester, Michele Kutzler, and Laura F. Steel

ASM Infection and Immunity Forum 2009 (Philadelphia PA); HIV-1 Tat dependent expression of interfering RNAs using a chimeric promoter containing the HIV-1 TAR element. Viraj R. Sanghvi, B. Barbara Diaz, Archana Gupta, and Laura F. Steel. (First prize awarded to VRS for this poster presentation.)

Conference on Retroviruses and Opportunistic Infections (CROI), Feb 16 -19, 2010, San

Francisco, CA. Expression of interfering RNAs from a chimeric, HIV-1 Tat-inducible RNA Pol II promoter. Viraj R. Sanghvi, Albert J. Sylvester, Michele A. Kutzler, and Laura F. Steel

HIV Biology and Pathogenesis, Keystone Symposia, Jan 12 - 17, 2010, Santa Fe, NM. Interaction between the cellular RNAi pathway and HIV-1 replication. Viraj R. Sanghvi and Laura F. Steel.

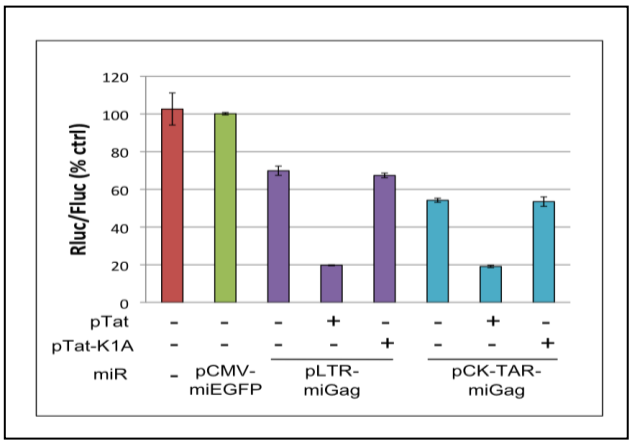

Figure 1. Tat induces silencing by miGag expressed in Jurkat T-cells from the viral LTR and from the chimeric CK-TAR promoter.

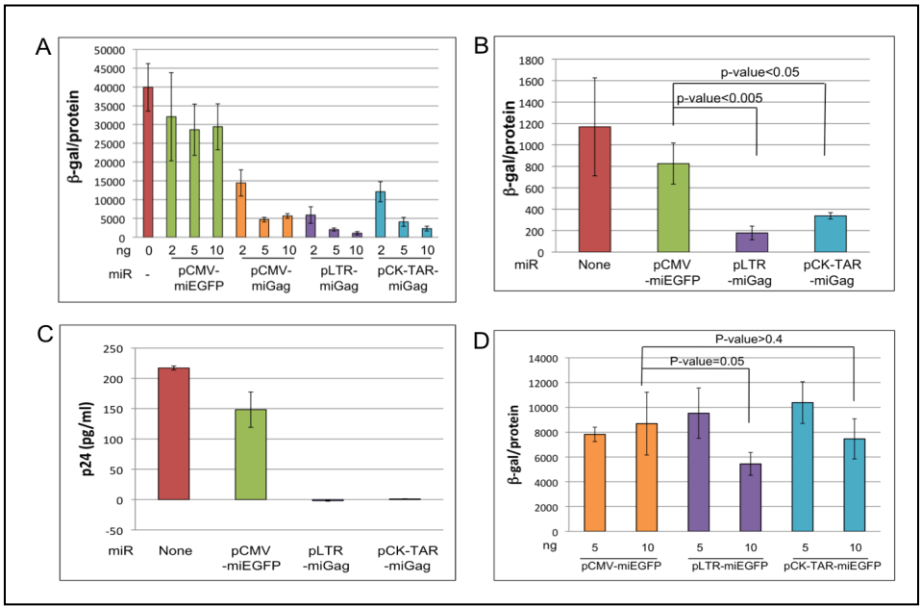

Figure 2. Tat produced from replicating virus is sufficient to induce silencing activity from miRNAs driven by the viral LTR or by the CK-TAR promoter.

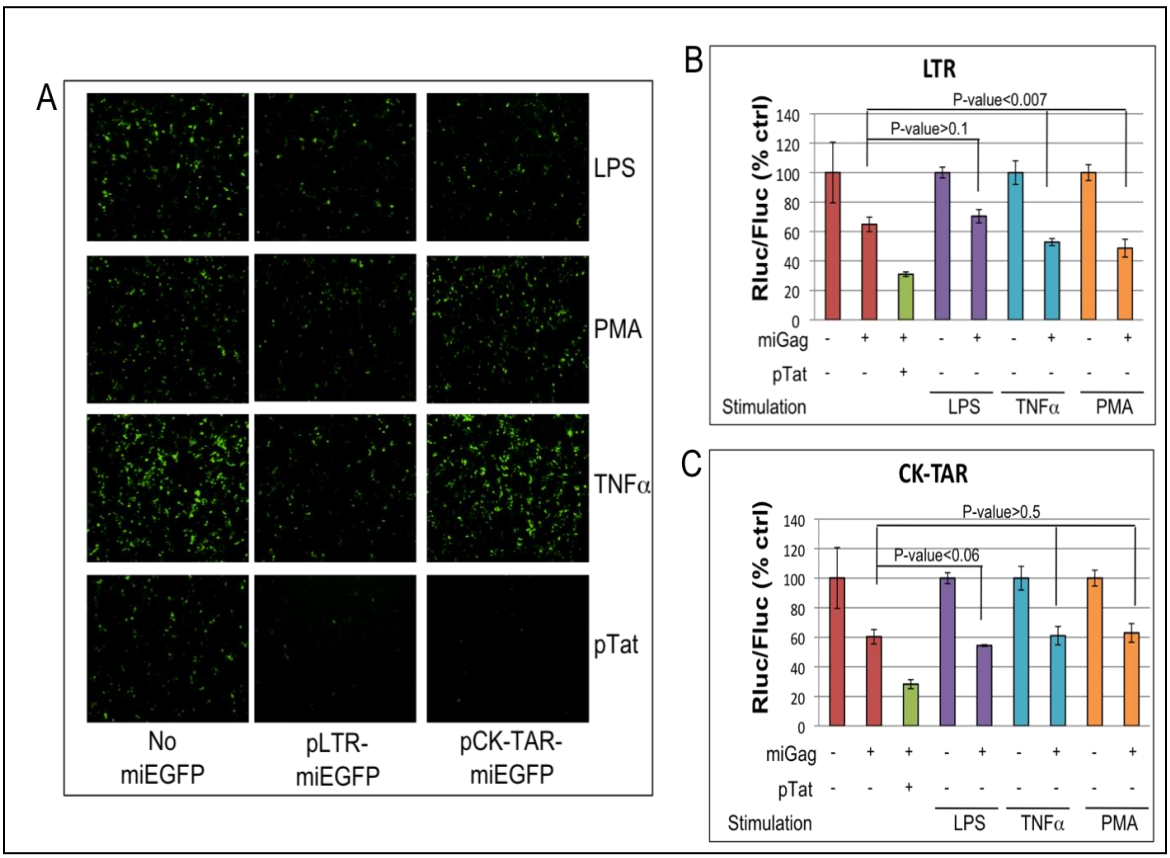

Figure 3. Response of the LTR and the CK-TAR promoter to stimulation of cells with LPS, PMA, and TNFα.

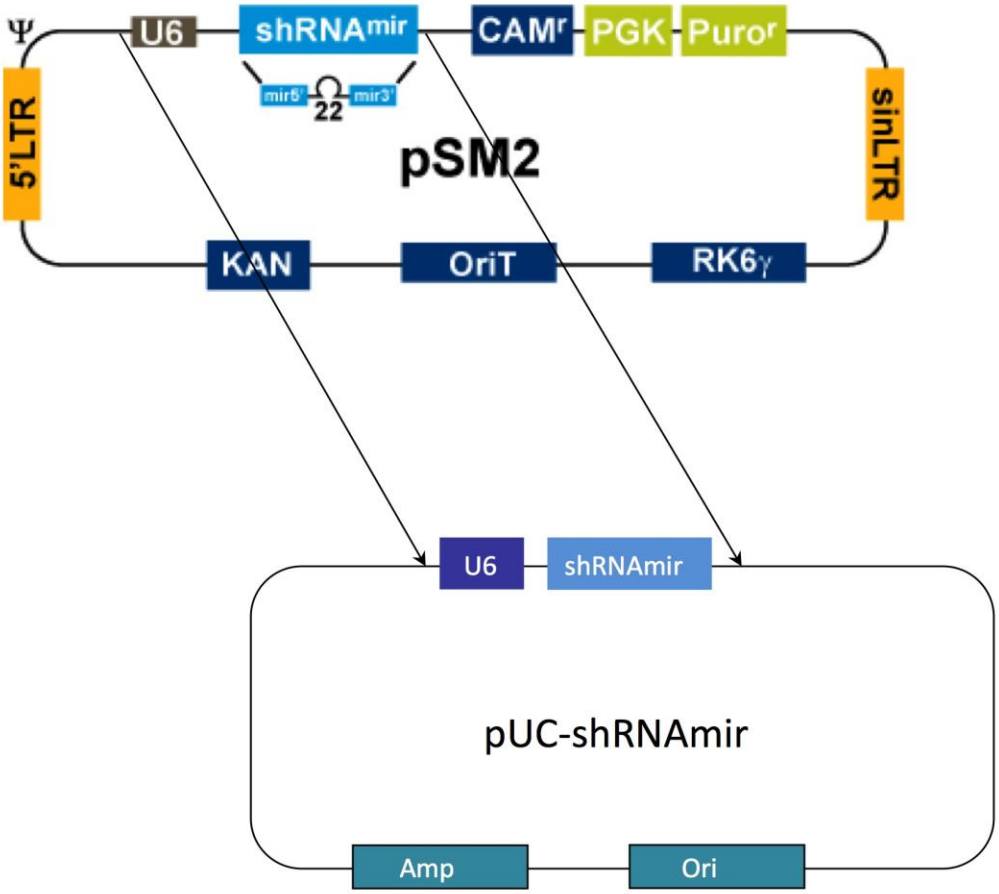

Figure 4. For initial testing, the expression cassette with CCR2 candidate shRNAmir, driven from a pol III (U6) promoter, was moved from the pSM2 vector to a simpler pUC19-based vector.

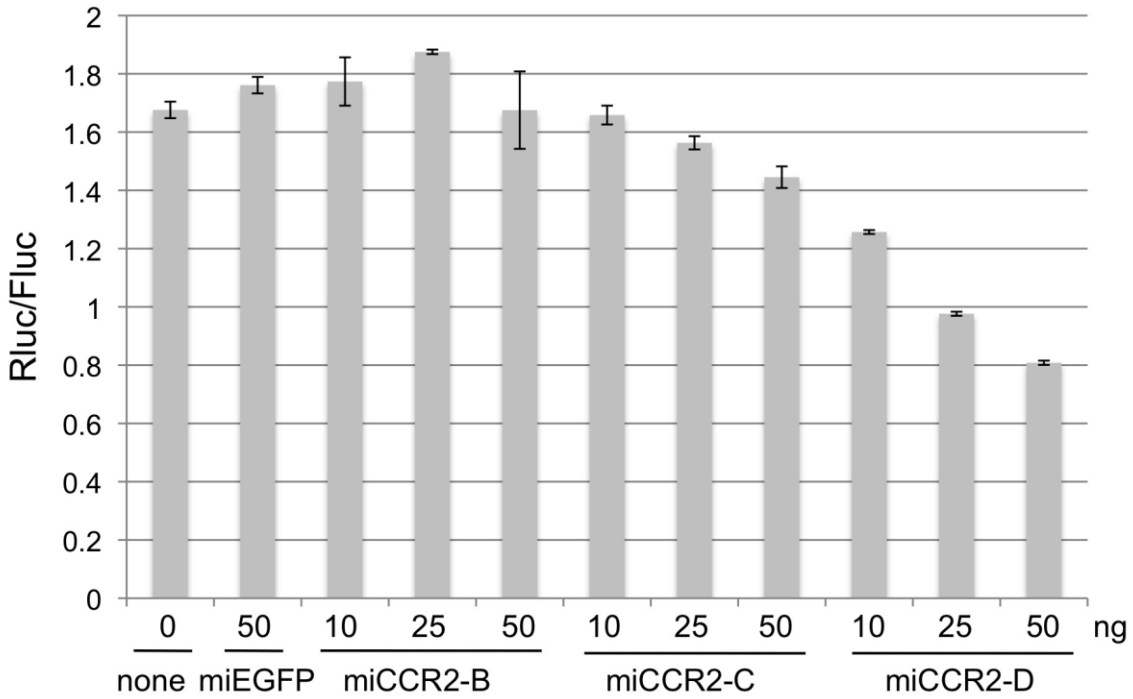

Figure 5. Initial testing of the silencing efficacy of candidate CCR2-miRNA expression vectors. HEK-293T cells were transfected with three different doses of the effector plasmids together with a constant amount of psiCH-CCR2 dual luciferase reporter plasmid, as indicated. Two days post-transfection, cells were lysed and assayed for Rluc and Fluc activity. The CCR2-D miRNA construct shows approximately 50% silencing of the Renilla luciferase reporter when transfected at 50 ng, and was selected for further study.

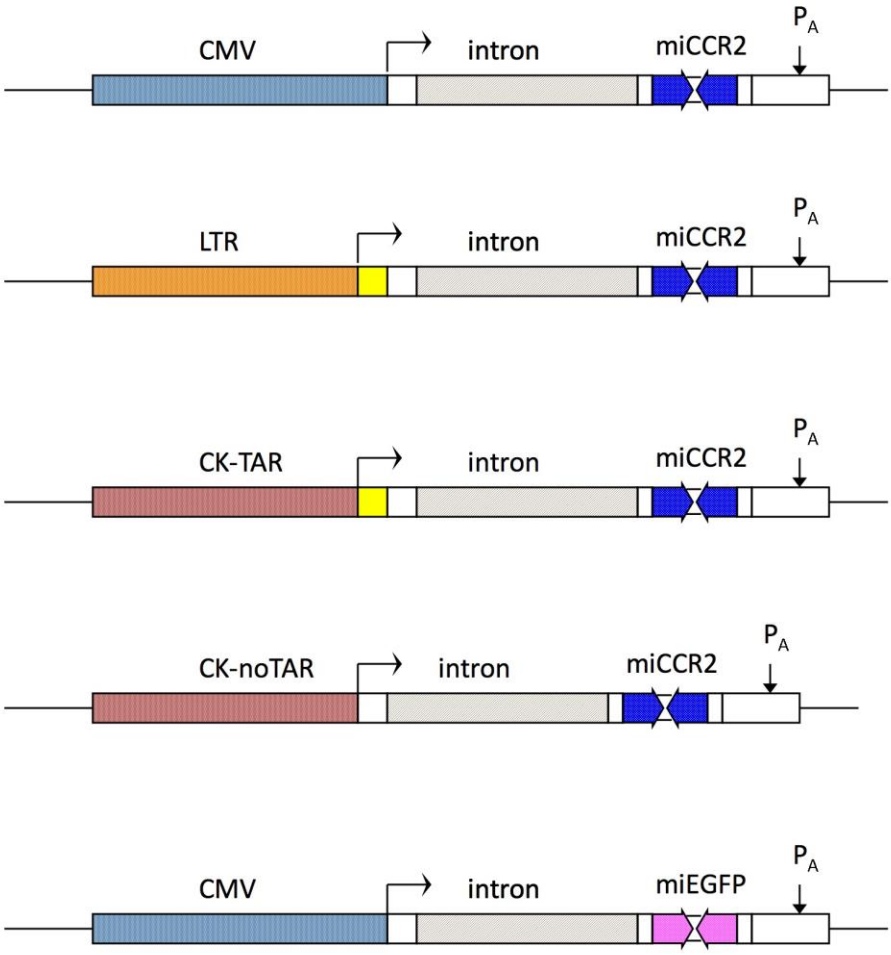

Figure 6. Gene cassettes for expression of CCR2-miRNA from RNA pol II promoters. Plasmids have been constructed using several different promoters, as outlined in the text, to assess inducible silencing of a CCR2 target. CMV, cytomegalovirus immediate early promoter; LTR, HIV-1 long terminal repeat; CK-TAR, chicken β-actin core promoter with HIV-1 TAR region; CK-noTAR, CK promoter with TAR region deletion. The CMV-miEGFP construct serves as a control for the specificity of silencing by CCR2-miRNA. The bent arrow denotes the start of transcription and P_A indicates a polyadenylation site.

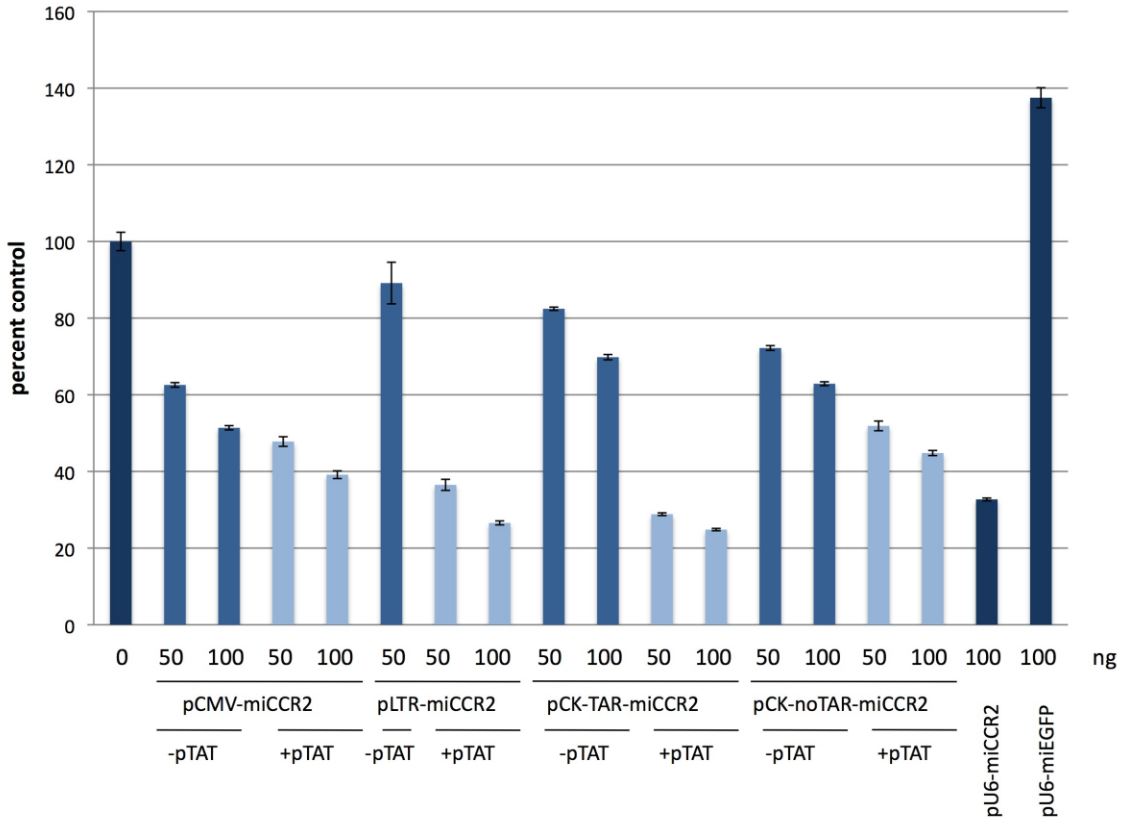

Figure 7. Inducible silencing activity of CCR2-miRNAs. Plasmids carrying the gene cassettes depicted in Fig 3 were transfected into HEK-293T cells together with a CCR2 dual luciferase reporter plasmid, in the presence or absence of a Tat expression plasmid, as indicated. Results show Rluc/Fluc activity in lysates prepared from cells two days post-transfection. Results are normalized to Rluc/Fluc measured in cells that were transfected with the reporter only.

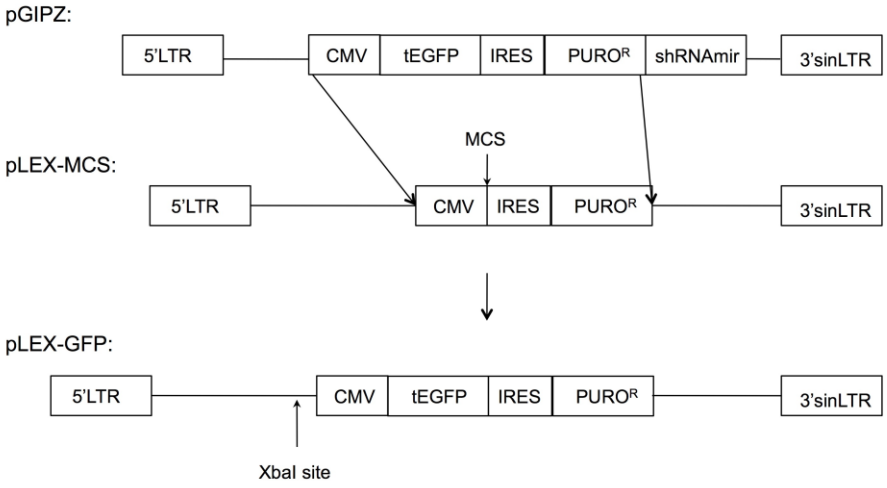

Figure 8. Construction of the lentiviral vector, pLEX-GPF. The CMV-tEGFP/IRES/Puro^R expression cassette from pGIPZ was used to replace the CMV-MCS/IRES/Puro^R cassette of pLEX-MCS to generate a new plasmid, pLEX-GPF. The unique XbaI site in pLEX-GFP will be used for insertion of the CCR2-miRNA (and control) expression cassettes shown in Fig. 6. (Only features of these lentiviral vectors that are directly relevant to our experimental design are shown.)

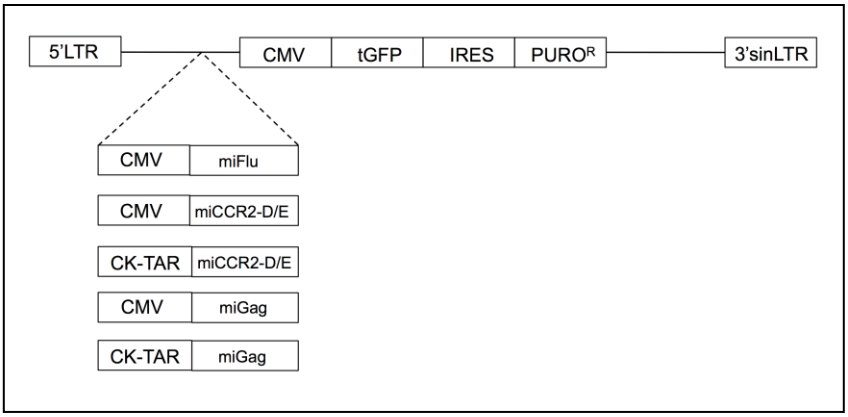

Figure 9. Expression cassettes for constitutive expression of the indicated miRNAs from the CMV promoter, or HIV-1 Tat-inducible expression from the CK-TAR promoter, have been inserted into the pLEX-GFP lentiviral vector.

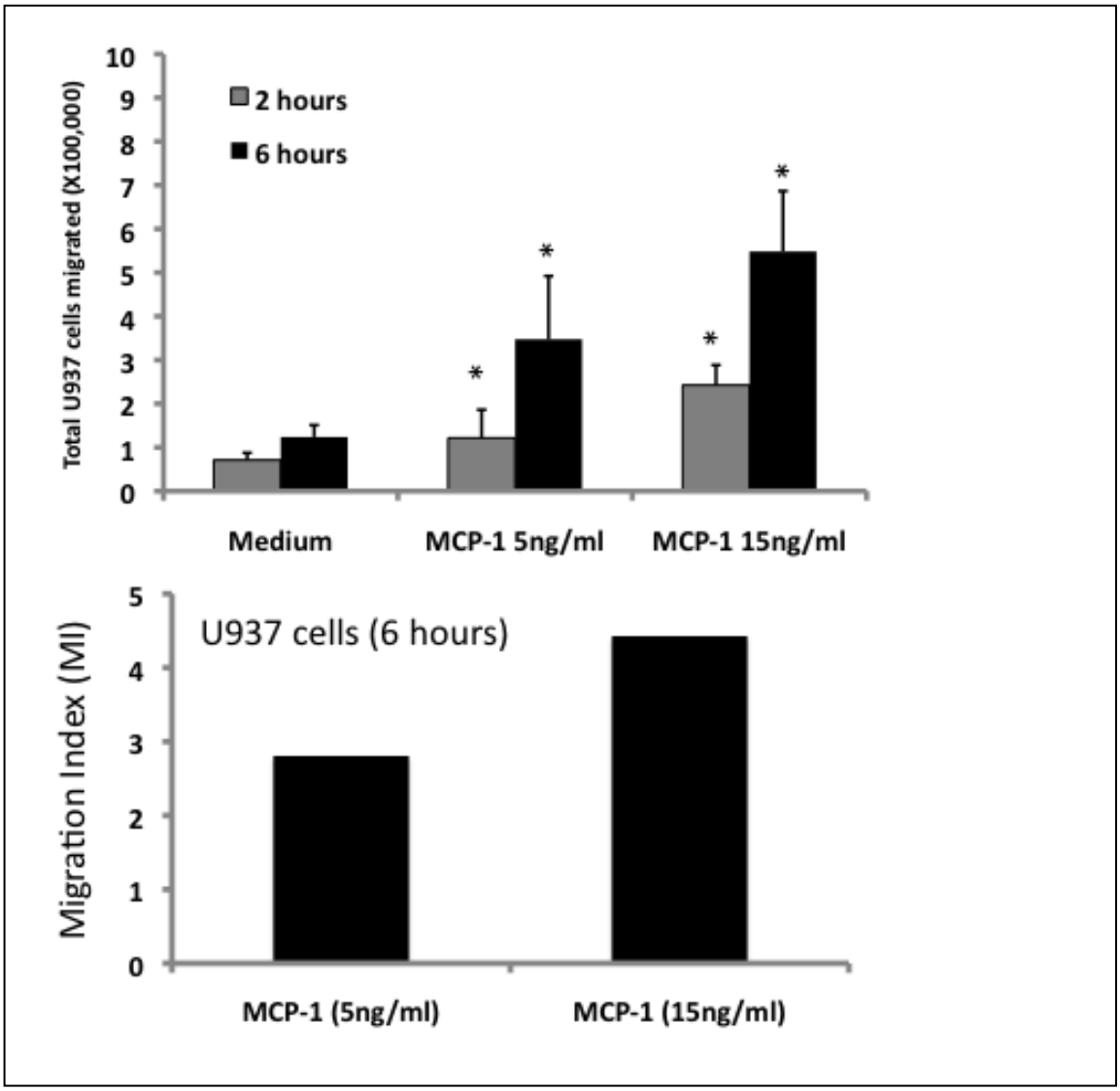

Figure 10. The migration of U937 cells towards MCP-1 in Transwell assays is both dose and time dependent.

18. Extent of Clinical Activities Initiated and Completed. Items 18(A) and 18(B) should be completed for all research projects. If the project was restricted to secondary analysis of clinical data or data analysis of clinical research, then responses to 18(A) and 18(B) should be "No."

18(A) Did you initiate a study that involved the testing of treatment, prevention or diagnostic procedures on human subjects?

_____Yes

__X__ No

18(B) Did you complete a study that involved the testing of treatment, prevention or diagnostic procedures on human subjects?

_____Yes
__X__No

If "Yes" to either 18(A) or 18(B), items 18(C) – (F) must also be completed. (Do NOT complete 18(C-F) if 18(A) and 18(B) are both "No.")

18(C) How many hospital and health care professionals were involved in the research project?

_____Number of hospital and health care professionals involved in the research project

18(D) How many subjects were included in the study compared to targeted goals?

_____Number of subjects originally targeted to be included in the study
_____Number of subjects enrolled in the study

18(E) How many subjects were enrolled in the study by gender, ethnicity and race?

Gender:
_____Males
_____Females
_____Unknown

Ethnicity:
_____Latinos or Hispanics
_____Not Latinos or Hispanics
_____Unknown

Race:
_____American Indian or Alaska Native
_____Asian
_____Blacks or African American
_____Native Hawaiian or Other Pacific Islander
_____White
_____Other, specify:_____
_____Unknown

18(F) Where was the research study conducted? (List the county where the research study was conducted. If the treatment, prevention and diagnostic tests were offered in more than one county, list all of the counties where the research study was conducted.)

19. Human Embryonic Stem Cell Research. Item 19(A) should be completed for all research projects. If the research project involved human embryonic stem cells, items 19(B) and 19(C) must also be completed.

19(A) Did this project involve, in any capacity, human embryonic stem cells?
_____Yes
__X__ No

19(B) Were these stem cell lines NIH-approved lines that were derived outside of Pennsylvania?
_____Yes
_____ No

19(C) Please describe how this project involved human embryonic stem cells:

20. Articles Submitted to Peer-Reviewed Publications.

20(A) Identify all publications that resulted from the research performed during the funding period and that have been submitted to peer-reviewed publications. Do not list journal abstracts or presentations at professional meetings; abstract and meeting presentations should be listed at the end of item 17. **Include only those publications that acknowledge the Pennsylvania Department of Health as a funding source** (as required in the grant agreement). List the title of the journal article, the authors, the name of the peer-reviewed publication, the month and year when it was submitted, and the status of publication (submitted for publication, accepted for publication or published.). Submit an electronic copy of each publication, listed in the table, in a PDF version 5.0.5 format, 1,200 dpi. Filenames for each publication should include the number of the research project, the last name of the PI, the number of the publication and an abbreviated research project title. For example, if you submit two publications for PI Smith for the "Cognition and MRI in Older Adults" research project (Project 1), and two publications for PI Zhang for the "Lung Cancer" research project (Project 3), the filenames should be:

Project 1 – Smith – Publication 1 – Cognition and MRI
Project 1 – Smith – Publication 2 – Cognition and MRI
Project 3 – Zhang – Publication 1 – Lung Cancer
Project 3 – Zhang – Publication 2 – Lung Cancer

If the publication is not available electronically, provide 5 paper copies of the publication.

Note: The grant agreement requires that recipients acknowledge the Pennsylvania Department of Health funding in all publications. Please ensure that all publications listed acknowledge the Department of Health funding. If a publication does not acknowledge the funding from the Commonwealth, do not list the publication.

Title of Journal Article:	Authors:	Name of Peer-reviewed Publication:	Month and Year Submitted:	Publication Status (check appropriate box below):
1. Expression of interfering RNAs from an HIV-1 Tat-inducible chimeric promoter	Viraj R. Sanghvi and Laura F. Steel	Virus Research	June 2010	☐Submitted ☐Accepted ☒Published

20(B) Based on this project, are you planning to submit articles to peer-reviewed publications in the future?

Yes__X_____ No_____

If yes, please describe your plans:

We are in the process of completing final experiments for at least two additional publications based on work funded initially by this CURE grant and now by a second CURE award for an extended version of this project.

21. Changes in Outcome, Impact and Effectiveness Attributable to the Research Project. Describe the outcome, impact, and effectiveness of the research project by summarizing its impact on the incidence of disease, death from disease, stage of disease at time of diagnosis, or other relevant measures of outcome, impact or effectiveness of the research project. If there were no changes, insert "None"; do not use "Not applicable." Responses must be single-spaced below, and no smaller than 12-point type. DO NOT DELETE THESE INSTRUCTIONS. There is no limit to the length of your response.

This work has brought us closer to the goal of providing a novel approach to HIV-1 therapy that addresses both viral replication and disruptions of cellular signaling that are responsible for much of the pathogensis of this disease.

22. Major Discoveries, New Drugs, and New Approaches for Prevention Diagnosis and Treatment. Describe major discoveries, new drugs, and new approaches for prevention, diagnosis and treatment that are attributable to the completed research project. If there were no major discoveries, drugs or approaches, insert "None"; do not use "Not applicable." Responses must be single-spaced below, and no smaller than 12-point type. DO NOT DELETE THESE INSTRUCTIONS. There is no limit to the length of your response.

Our work utilizes a new approach to antiviral therapy that is based on gene silencing technologies. This is an active area of new research that shows great promise, although problems remain to be solved before the strategy can be implemented. For instance, HIV-1 is able to escape from silencing reagents because of the high mutation rate of this virus. Our

research seeks to develop a method that will silence cellular genes that are necessary for viral replication or pathogenesis, and thereby avoid the problem of rapid viral evolution. Our project is at an early, proof-of-concept stage that represents the basic investigation that must be completed in order to develop new treatments for disease.

23. Inventions, Patents and Commercial Development Opportunities.

23(A) Were any inventions, which may be patentable or otherwise protectable under Title 35 of the United States Code, conceived or first actually reduced to practice in the performance of work under this health research grant? Yes_____ No___X_____

If "Yes" to 23(A), complete items a – g below for each invention. (Do NOT complete items a - g if 23(A) is "No.")

a. Title of Invention:

b. Name of Inventor(s):

c. Technical Description of Invention (describe nature, purpose, operation and physical, chemical, biological or electrical characteristics of the invention):

d. Was a patent filed for the invention conceived or first actually reduced to practice in the performance of work under this health research grant?
Yes_____ No___

If yes, indicate date patent was filed:

e. Was a patent issued for the invention conceived or first actually reduced to practice in the performance of work under this health research grant?
Yes_____ No___
If yes, indicate number of patent, title and date issued:
Patent number:
Title of patent:
Date issued:

f. Were any licenses granted for the patent obtained as a result of work performed under this health research grant? Yes_____ No___

If yes, how many licenses were granted?_____

g. Were any commercial development activities taken to develop the invention into a commercial product or service for manufacture or sale? Yes__ No___

If yes, describe the commercial development activities:

23(B) Based on the results of this project, are you planning to file for any licenses or patents, or undertake any commercial development opportunities in the future?

Yes_____ No___X_____

If yes, please describe your plans:

24. Key Investigator Qualifications. Briefly describe the education, research interests and experience and professional commitments of the Principal Investigator and all other key investigators. In place of narrative you may insert the NIH biosketch form here; however, please limit each biosketch to 1-2 pages. *For Nonformula grants only – include information for only those key investigators whose biosketches were not included in the original grant application.*

BIOGRAPHICAL SKETCH

Provide the following information for the key personnel and other significant contributors.
Follow this format for each person. **DO NOT EXCEED FOUR PAGES.**

NAME Laura F. Steel, Ph.D.	POSITION TITLE Assistant Professor
eRA COMMONS USER NAME STEEL1	

EDUCATION/TRAINING *(Begin with baccalaureate or other initial professional education, such as nursing, include postdoctoral training and residency training if applicable.)*

INSTITUTION AND LOCATION	DEGREE *(if applicable)*	YEAR(s)	FIELD OF STUDY
University of Michigan, Ann Arbor, MI	--	1967-69	
Yale University, New Haven, CT	B.A.	1971	Biology
Cornell University, Ithaca, NY	Ph.D.	1977	Genetics
Univ of Mass. Medical School, Worcester, MA	post-doc	1977-81	Molecular Biology

Positions and Honors

1981-1987	Instructor, Department of Molecular Genetics and Microbiology, University of Massachusetts Medical School, Worcester, MA
1982-1984	Scientist/Consultant under contract to Cetus Corporation, Emeryville, CA. Work performed at Univ. of Mass. Medical School, Worcester, MA
1987-1989	Assistant Professer (Research), Department of Molecular Genetics and Microbiology, Univ. of Mass. Medical School, Worcester, MA
1989-1991	Assistant Professor, Fels Institute for Cancer Research and Molecular Biology, Temple University, Philadelphia, PA
1991-1996	Assistant Professor, Jefferson Cancer Institute, Thomas Jefferson University, Philadelphia, PA. (In 1991, members of the Fels Institute relocated to Thomas Jefferson University.)
1996-1998	Lecturer, Biology Department, University of Pennsylvania, Philadelphia, PA Instructor, College of Graduate Studies, Thomas Jefferson University
1998-2004	Assistant Professor (Research), Department of Biochemistry and Molecular Pharmacology, Jefferson Center for Biomedical Research, Thomas Jefferson University, Doylestown, PA
2004-present	Assistant Professor, Department of Microbiology and Immunology, Drexel University College of Medicine, Philadelphia, PA (In 2004, the Jefferson Center switched its academic affiliation to Drexel University.)
1971-1977	NIH Pre-doctoral Fellow
1977-1979	American Cancer Society Post-doctoral Fellow
1979-1981	Muscular Dystrophy Association Post-doctoral Fellow

Selected Publications

Steel, L.F. and Jacobson, A. (1991). Sequence elements that affect mRNA translational activity in developing *Dictyostelium* cells. Devel. Genet. 12,98-103. PMID: 2049885

Steel, L.F., Farnum, P.D., and Kunapoli, P. (1995). Sequence and developmental regulation of the gene that encodes the *Dictyostelium discoideum* L3 ribosomal protein. Gene 162,123-128. PMID: 7557399

Steel, L.F., Telly, D.L., Leonard, J., Rice, B.A., and Sawicki, J.A. (1996). Elements in the murine c-*mos* messenger RNA 5'-untranslated region repress translation of downstream coding sequences. Cell Growth & Differentiation 7, 1415-1424. PMID: 8891345

Steel, L.F., Mattu, T.S., Mehta, A., Hebestreit, H., Dwek, R., Evans, A., London, W.T., and Block, T. (2001). A proteomic approach for the discovery of early detection markers of hepatocellular carcinoma. Disease Markers 17, 179-189. PMID: 11790885

Steel, L.F., Shumpert, D., Trotter, M., Seeholzer, S.H., Evans, A.A., London, W.T., Dwek, R., and Block, T.M. 2003. A strategy for the comparative analysis of serum proteomes for the discovery of biomarkers for hepatocellular carcinoma. Proteomics 3, 601-609. PMID: 12748940

Steel, L.F., Trotter, M.G., Nakajima, P.B., Mattu, T.S., Gonye, G., and Block, T.M. 2003. Efficient and specific removal of albumin from human serum samples. Molec Cell Proteomics 2.4, 262-270. PMID: 12754305

Comunale, M.A., Mattu, T.S., Lowman, M., Evans, A.A., London, W.T., Drake, R., Semmes, J., **Steel, L.F.**, Block, T.M., and Mehta, A. 2003. Comparative proteomic analysis of de-N-glycosylated serum from hepatitis B carriers reveals polypeptides that appear to correlate with disease status. Proteomics 4, 826-838. PMID: 14997503

Steel, L.F., Haab, B.B., and Hanash, S.M. 2005. Methods of comparative proteomic profiling for disease diagnosis. J. Chromatogr. B. 815,275-284. PMID: 15652816

Schwegler, E.E., Cazares, L., **Steel, L.F.**, Adam, B.L., Johnson, D.A., Semmes, O.J., Block, T.M., Marrero, J.A., Drake, R.R. 2005. SELDI-TOF-MS profiling of serum for detection of the progression of chronic hepatitis C to hepatocellular carcinoma Hepatology 41, 634-642. PMID: 15726646

Block, T.M., Comunale, M.A., Lowman, M., **Steel, L.F.**, Romano, P.R., Fimmel, C., Tennant, B.C., London, W.T., Evans, A.A., Blumberg, B.S., Dwek, R.A., Mattu, T.S., and Mehta, A.S. 2005, Use of targeted gylcoproteomics to identify serum glycoproteins that correlate with liver cancer in woodchucks and humans. Proc. Natl. Acad. Sci. 102, 779-784. PMID: 15642945

Marrero, J.A., Romano, P.R., Nikolaeva, O., **Steel, L.**, Mehta, A., Fimmel, C.J., Comunale, M.A., D'Amelio, A., Lok, A.S., and Block, T.M. 2005. GP73, a resident Golgi glycoprotein, is a novel serum marker for hepatocellular carcinoma. J Hepatol. 43, 1007-1012.

Snyder, L.C., Esser, J.E., Pachuk, C.J., and **Steel, L.F**. 2008. Vector design for liver specific expression of multiple interfering RNAs that target hepatitis B virus transcripts. Antiviral Research 80, 36-44. PMID: 18499277

Snyder, L.C., Ahmed, I., and **Steel, L.F.** 2009. RNA polymerase III can drive polycistronic expression of functional interfering RNAs designed to resemble microRNAs. Nucl Acids Res. 37,e127. PMID: 19679642

Sanghvi, V.R. and **Steel, L.F.** 2011. Expression of interfering RNAs from an HIV-1 Tat-inducible chimeric promoter. Virus Res. 155, 106-111. PMID: 20851721

Sanghvi, V.R. and **Steel, L.F.** 2011. A re-examination of global suppression of RNA interference by HIV-1. PLoS One (in press).

Book and Book Chapter:

Steel, L.F. (2000). Transformation of bacteria and purification of plasmid DNA, in Gene Transfer Methods: Introducing DNA into Living Cells and Organisms, eds. P. Norton and L. Steel, Eaton Publishing

Norton, P.A. and **Steel, L.F**. (eds.) (2000). Gene Transfer Methods: Introducing DNA into Living Cells and Organisms. Eaton Publishing, Natick.

Patent Application: PTC/US07/81103. miRNA-formatted multitarget interfering RNA vector constructs and methods of using the same. Inventors: L.F. Steel, C.J. Pachuk

BIOGRAPHICAL SKETCH

NAME	POSITION TITLE
Michele A. Kutzler, Ph.D.	Assistant Professor of Medicine
eRA COMMONS USER NAME (credential, e.g., agency login) MKUTZLER	Assistant Professor of Microbiology and Immunology

EDUCATION/TRAINING *(Begin with baccalaureate or other initial professional education, such as nursing, and*

INSTITUTION AND LOCATION	DEGREE *(if applicable)*	YEAR(s)	FIELD OF STUDY
Temple University	B.S.	1995	Biology/Education
Temple University School of Medicine	Ph.D.	2001	Micro/Immunol/Drugs of Abuse
University of Pennsylvania Postdoctoral Fellow		2001-2006	DNA vaccines/immunology
University of Pennsylvania Research Associate		2006-2007	Mucosa/vaccine/animal models
Drexel University College of Medicine Depart. Medicine Assistant Professor Depart. Micro/Immuno Assistant Professor		2007-present	Mucosa/vaccine/animal models/infectious disease/Drugs of Abuse

Honors

1993-1996 **Honors Research in Biology** Temple University, Philadelphia, PA.

1994, 1995, 1996 **Henry R. Sklar Ambassador Award for academic achievement, leadership and dedication,** Temple University, Philadelphia, PA.

1994 **National Science Foundation Summer Honors Research Program**. Temple University Philadelphia, PA.

1995 **Mark Berger Prize for outstanding research in neurobiology.** Temple University Philadelphia, PA.

1995 **Graduation with Distinction in Biology major.** Temple University Philadelphia, PA.

1998 **Young Investigator Award**. The sixth annual symposium for Drugs of Abuse, Immunomodulation and AIDS

2003 **Fellow Travel Grant Awardee**. AIDS Vaccine 2003. New York, NY

2005 **Outstanding Lecturer Award**. Fourth Annual Postdoctoral Symposium. The University of Pennsylvania School of Medicine, Philadelphia, PA

2010 **Young Investigator Conference Scholarship Recipient** AIDS Vaccine 2010, Atlanta GA

2010 Named one of Drexel's "**REACH: Drexel's Next Generation Junior Faculty**" representing Drexel University College of Medicine

Selected peer-reviewed publications (selected from 38 articles, Wetzel is *maiden* name)

Wetzel, M. A., A. D. Steele, E. E. Henderson, and T. J. Rogers. **2002.** The effect of X4 and R5 HIV-1 on C, C-C, and C-X-C chemokines during the early stages of infection in human PBMCs. *Virology* 292:6-15.

Szabo, I., **M. A. Wetze**l, N. Zhang, A. D. Steele, D. E. Kaminsky, C. Chen, L. Y. Liu-Chen, F. Bednar, E. E. Henderson, O. M. Howard, J. J. Oppenheim, and T. J. Rogers. **2003**. Selective inactivation of CCR5 and decreased infectivity of R5 HIV-1 strains mediated by opioid-induced heterologous desensitization. *Journal of leukocyte biology* 74:1074-1082.

Kutzler, M. A., T. M. Robinson, M. A. Chattergoon, D. K. Choo, A. Y. Choo, P. Y. Choe, M. P. Ramanathan, R. Parkinson, S. Kudchodkar, Y. Tamura, M. Sidhu, V. Roopchand, J. J. Kim, G. N. Pavlakis, B. K. Felber, T. A. Waldmann, **J. D. Boyer,** and D. B. Weiner. **2005.** Coimmunization with an optimized IL-15 plasmid results in enhanced function and longevity of CD8 T cells that are partially independent of CD4 T cell help. *J Immunol* 175:112-123.

Boyer, J. D., T. M. Robinson, **M. A. Kutzler**, G. Vansant, D. A. Hokey, S. Kumar, R. Parkinson, L. Wu, M. K. Sidhu, G. N. Pavlakis, B. K. Felber, C. Brown, P. Silvera, M. G. Lewis, J. Monforte, T. A. Waldmann, J. Eldridge, and D. B. Weiner. **2007**. Protection against simian/human immunodeficiency virus (SHIV) 89.6P in macaques after coimmunization with SHIV antigen and IL-15 plasmid. *Proc Natl Acad Sci U S A* 104:18648-18653.

J.D. Boyer, T.M. Robinson, **M.A. Kutzler**, Sandra A. Calarota, Daniel Choo, Solomon Sackiley, Vidia Roopchand, Maninder K. Sidhu, Karuppiah Muthumani, Mark Lewis, George Pavlakis, Thomas Waldmann, David Weiner. **2007**. SIV DNA Vaccine Co-Administered with an Engineered Adjuvant Plasmids Enhances CD8 SIV Specific Cellular Immune Responses in Cynomolgus Macaques. *PNAS Proc Natl Acad Sci U S A* 104:18648-18653.

Happel, C., A. D. Steele, M. J. Finley, **M. A. Kutzler**, and T. J. Rogers. **2008**. DAMGO-induced expression of chemokines and chemokine receptors: the role of TGF-{beta}1. *J Leukoc Biol* 83:956-963.

Laddy, D. J., J. Yan, **M. Kutzler**, D. Kobasa, G. P. Kobinger, A. S. Khan, J. Greenhouse, N. Y. Sardesai, R. Draghia-Akli, and D. B. Weiner. **2008**. Heterosubtypic protection against pathogenic human and avian influenza viruses via in vivo electroporation of synthetic consensus DNA antigens. *PLoS ONE* 3:e2517.

Kutzler, M.A. and D.B. Weiner. **2008**. DNA Vaccines: Ready for Prime Time? *Nature Reviews Genetics*. Vol.9:1-13.

Kimberly A. Kraynyak, **M.A. Kutzler**, Neil J. Cisper, Dominick J. Laddy, Matthew P. Morrow, Thomas A.Waldmann, and David B. Weiner. **2009.** Plasmid-Encoded IL-15Rα Adjuvants Specific Immune Responses Induced by a DNA Vaccine *in vivo. Human Gene Therapy* Oct 20(10):1143-56.

Kutzler, M.A., Kimberly A. Kraynyak, Sarah J. Nagle, Rose M. Parkinson, Darya Zharikova, Michael Chattergoon, Henry Maguire, Karuppiah Muthumani, Kenneth Ugen and David B. Weiner. **2010.** Plasmids encoding the mucosal chemokines CCL27 and CCL28 are effective adjuvants in eliciting antigen-specific immunity *in vivo. Gene Therapy* Jan;17(1);72-82. Epub, 2009:Oct 22.

K. A Kraynyak, **M.A. Kutzler**, N. J Cisper, A.S. Khan, R. Draghia-Akli; N.Y. Sardesal, M. G. Lewis, J.Yan, D.B. Weiner. **2010**. Systemic Immunization with CCL27/CTACK Modulates Immune Responses at Mucosal Sites in Mice and Macaques. *Vaccine* 28:1942-1951.

C. Happel, **M.A. Kutzler**, and T. J. Rogers **2010**. Opioid-induced chemokine expression requires NF{kappa}B activity: the role of PKC{zeta}. *J Leukoc Biol* Oct 15. [Epub ahead of print].

Patent/copyright:

U.S. PATENT: NO. 04776577.1-2101-US2004018962, SOUTH AFRICAN PATENT NUMBER 2006/00336, INDIAN PATENT NUMBER 2581/KOLNP/2005 Entitled: Nucleic Acid sequences encoding and compositions comprising IgE signal peptide and/or IL-15 and methods for using the same. November 29, 2006.

EUROPEAN PATENT OFFICE PATENT NO. 02723190.1-2107-US0205063 Entitled: Methods and Compositions for Inhibiting HIV-Coreceptor Interactions. FEBRUARY 15, 2002

UNITED STATES COPYRIGHT OFFICE REGISTRATION NUMBER TX5-526-971 Entitled: Stimulation of Chemokine Expression Following Mu-Opioid Administration, HIV-1 Infection, and Activation of Certain Seven Transmembrane G Protein-Coupled Receptors. JUNE 15, 2001